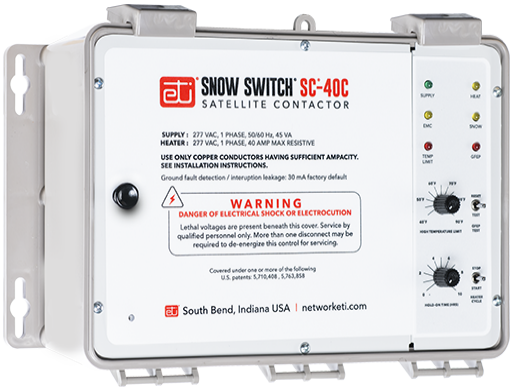

SNOW SWITCH MODEL SC-40C

MODULAR SNOW/ICE HEATER CONTROL SYSTEM

FEATURES & BENEFITS

- Automatic snow and ice melting control minimizes operating costs
- ETI PN 22477: 208-240 VAC, 50 amp max.resistive
  ETI PN 22478: 277 VAC, 40 amp max. resistive
  ETI PN 22480: 277/480, 50 amp max. resistive
  ETI PN 22481: 600 VAC, 50 amp max. resistive
- UL Listed for Temperature Regulating Equipment
- Adjustable Hold-On timer continues heater operation after snow and ice stop to ensure complete melting
- Automatic and manual-override operator controls forG changing environmental conditions
- Optional remote control operation for added convenience
- Integral 30mA of Ground Fault Equipment Protection (G GFEP) Weather-resistant NEMA 3 R enclosure

DESCRIPTION

The ETI SC-40C snow and ice melting satellite contactor answers the need for cost effective modular snow melting heater control . One or more SC-40Cs, when used with an APS-4C control panel acting as the master control , allow for modular snow melting system design . There is no limit to the number of SC-40 Cs that can be inter - faced in a single system. This approach reduces front end design , hardware , and installation costs while providing a number of useful features that would be otherwise too expensive and complex to implement.

The SC -40 C provides Ground -Fault Equipment Protection (GFEP) as required by the national electrical codes. Upon sensing a ground -fault condition , the SC -40 C inhibits operation of its contactor until manually reset. Circuits without a ground fault continue to operate normally , thus partitioning defective heating cables.

The adjustable hold-on timer continues heater operation on each SC-40C for up to 10 hours after snow stops to ensure complete melting and to compensate for differences between zones . The optional RCU -4 remote control unit can be located where system operation can be conveniently observed . It duplicates many of the controls and indicators on the SC-40C front panel.

Each SC -40 C provides a complete energy management computer (EMC) interface. This feature provides remote access for advanced applications requiring remote or zone control along with remote annunciation . Each SC-40 C maintains communication to and from the APS-4C using a 3-wire cable.

Thus, the APS-4C alarms ground faults occurring anywhere in the system. This feature inserts a short time delay between the operation of each contactor , thus improving power quality by limiting the inrush current . The RCU -4 remote control unit supplied permits overriding zone control in applications requiring the capability.

SPECIFICATIONS

GENERAL

Area of use	Non-hazardous locations
Approvals	c UL us LISTED 109R **Type 873** Temperature Regulating Equipment Also evaluated by Underwriters Laboratories Inc® in accordance with UL 1053 Ground-Fault Sensing and Relaying Equipment

ENCLOSURE

Protection	NEMA 3R
Cover attachment	Hinged polycarbonate cover, lockable
Entries	One 1-1/16" entry (top) for NEC Class 2 connections Two 1-11/16" entries (bottom) for supply and load power, except 277V single phase Two 1-1/16" entries (bottom) for supply and load power, 277 V single phase only
Material	Polycarbonate
Mounting	Wall mount
Dimensions	9.125" (L) x 11.500" (W) x 6.562" (H) 232mm (L) x 292mm (W) x 167mm (H)

CONTROL

Supply voltage	SC-40C 208/240 V:	208–240 V 50/60 Hz 3-phase
	SC-40C 277 V:	277 V 50/60 Hz single phase
	SC-40C 277/480 V:	277/480 V 50/60 Hz 3-phase
	SC-40C 600 V:	600 V 50/60 Hz 3-phase
Load	ETI PN 22477: 208-240 VAC, 50 amp max. resistive ETI PN 22478: 277 VAC, 40 amp max. resistive ETI PN 22480: 277/480, 50 amp max. resistive ETI PN 22481: 600 VAC, 50 amp max. resistive	
Contact type	3 Form A	
Weight	3 Pounds	
Maximum Ratings	Voltage: 600 V Current: 50 A except 277 V single phase, 40 A for 277 V single phase	
Heater hold-on timer	0 to 10 hours; actuated by snow stopping or toggle switch	
System test	Switch toggles heater contact on and off. If temperature exceeds optional high limit thermistor (45°F), heater shuts off to reduce costs and prevent damage.	

FRONT PANEL INTERFACE

Status indicator	SUPPLY (green): Power on HEAT (yellow): Heating cycle in progress SNOW (yellow): Sensor(s) detect snow GFEP (red): Ground Fault condition GFEP (red, flashing): Failed GFEP (red, rapid flashing): GFEP test in progress

Communication Bus

Number of cascaded units	Unlimited
Contactor delay	5 second
Bus-wire type	3-wire jacketed cable
Circuit type	NEC Class 2
Lead length	Up to 500' (152m) using 18 AWG 3-wire jacketed cable Up to 1,000' (304m) using 12 AWG 3-wire jacketed cable

GROUND FAULT EQUIPMENT PROTECTION (GFEP)

Set point	30 mA (default); 60 mA and 120 mA selectable by DIP switch
Automatic self-test	Mode A: Verifies GFEP function before contactors operate Mode B: Verifies GFEP and heaters every 24 hours
Manual Test/Reset	Toggle switch provided for this function

ENVIRONMENTAL

Operating temperature	-50°F to 180°F (-45°C to 82°C)
Storage temperature	-40°F to 160°F (-40°C to 71°C)

ORDERING INFORMATION

ORDER NUMBER	DESCRIPTION
22477	SC-40C Satellite Contactor, 208-240 VAC 50/60 Hz Three Phase
22478	SC-40C Satellite Contactor, 277 VAC 50/60 Hz Single Phase
22480	SC-40C Satellite Contactor, 277/480 VAC 50/60 Hz Three Phase
22481	SC-40C Satellite Contactor, 600 VAC 50/60 Hz Three Phase

ACCESSORIES

21358	RCU-4 Remote Control
25076	Temperature Sensor w/ 20' (6m) lead PTS-
22690	100 Embedded Temperature Sensor (Optional)

DIMENSIONAL DRAWINGS

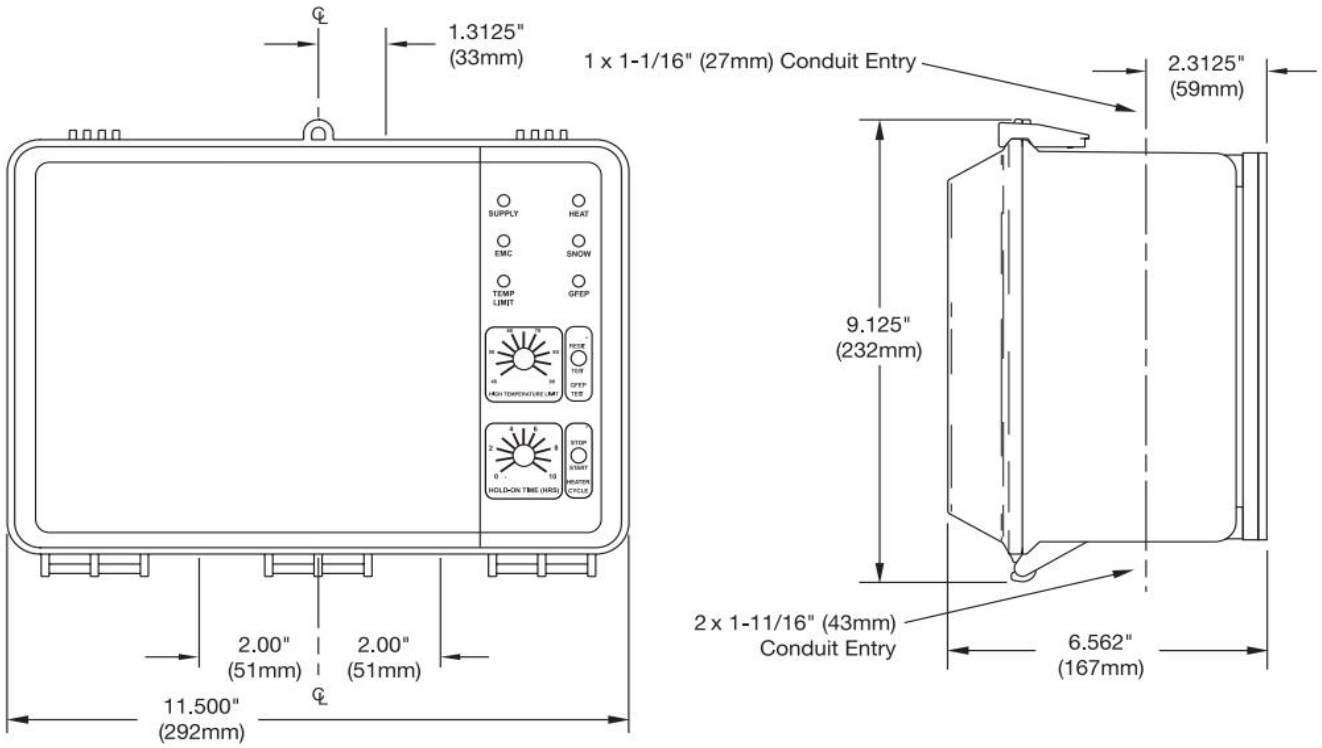

CONTACTING CUSTOMER SERVICE

For assistance, contact Customer Service. Office hours are from 8:00 AM until 5:00 PM ET.

Email: info@networketi.com

Web: networketi.com

Mail: ETI
1850 North Sheridan Street
South Bend, IN 46628

LIMITED WARRANTY

ETI's two year limited warranty covering defects in workmanship and materials applies. Contact Customer Service for complete warranty information.

DISCLAIMER

ETI makes no representations or warranties, either expressed or implied, with respect to the contents of this publication or the products that it describes, and specifically disclaims any implied warranties of merchantability or fitness for any particular purpose. ETI reserves the right to revise this publication, and to make changes and improvements to the products described in this publication, without the obligation of ETI to notify any person or organization of such revisions, changes or improvements.

The ETI logo, Snow Switch, We Manage Heat, CIT, GIT, and SIT are registered trademarks of ETI. PD Pro and RCU are trademarks of ETI. Copyright © 2013 ETI. All rights reserved.