SNOWSWITCH PD PRO
INSTALLATION & OPERATION MANUAL

This manual refers to the Snow Switch® Model PD Pro control panel manufactured after October 31, 2013, which uses a universal (100 – 277 VAC; 50/60 Hz) power supply.

Older units use a voltage-specific power supply and have different wiring configurations.



TABLE OF CONENTS

SECTION	PAGE
SAFETY INFORMATION & WARNINGS	2
PRODUCT TESTING RECORD	4
UNPACKING THE UNIT	5
INVENTORY	6
PRODUCT DESCRIPTION	6
SELECTING THE PROPER SENSOR	6
AVAILABLE OPTIONAL COMPONENTS	7
INSTALLING THE CONTROL	8
PREPARATION & SYSTEM SET-UP	9
SYSTEM SCHEMATIC DIAGRAMS	9
POST-INSTALLATION TESTING	13
OPERATION	15
MAINTENANCE	18
TROUBLESHOOTING	19
HEATER CONNECTION	24
SPECIFICATIONS	25
ORDERING INFORMATION	26

SAFETY INFORMATION AND WARNING SUMMARY

Read and become familiar with the safety information below.

Abnormal Odor or Smoke

In the event of smoke or a burning or abnormal odor, immediately interrupt power to the unit by turning off the circuit breaker protecting the unit.

Odeur ou fumée anormale

En cas de fumée ou de brûlure ou d'odeur anormale, coupez immédiatement l'alimentation de l'unité en fermant le disjoncteur protégeant l'unité.

ELECTRICAL SHOCK / FIRE HAZARD

Even when the heat cables are disconnected, if the circuit breaker is on and power is running to the unit, voltage is still being applied to the yellow heat cable leads. Therefore, never touch the ends of the yellow leads or let the two leads touch each other. Do not let the two yellow heat cable leads contact any component inside the unit.

Any installation involving electric heater wiring must be grounded to earth to protect against shock and fire hazard. Suitable ground fault detection and interrupting systems must always be in use to reduce shock and fire hazard and to protect equipment.

Electric wiring to heating elements must be installed in accordance with National Electrical Code (NEC) requirements and all other local and applicable electrical codes and any third-party standards. Follow the installation instructions contained herein and those provided by the heater manufacturer.

Use a GFEP (Ground Fault Equipment Protection) circuit breaker on each branch circuit connected to the ice melting system. Clearly label each circuit breaker with its function. This is vitally important when there is more than a single point of disconnect.

Size the circuit breaker in accordance with the size of the expected load. The maximum current load for the PD Pro is 30 Amp resistive. The PD Pro often serves as a pilot duty relay for operating high current single- or three-phase contactors in residential or light commercial applications. This product is intended for use in residential or light commercial applications. For larger or more critical installations, the "CMC" Series of control panels from Environmental Technology, Inc., provides a cost-effective solution offering enhanced system design and performance features.

Make certain that the heater shield is properly grounded. Failure to do so may result in damage to the equipment or fire.

Following installation, and prior to beginning system operation, refer to and perform the Post-Installation Tests described in this manual.

DANGER D'ÉLECTROCUTION / D'INCENDIE

Même lorsque les câbles chauffants sont déconnectés, si le disjoncteur est activé et que l'alimentation est l'appareil, une tension est toujours appliquée aux fils jaunes du câble chauffant. Par conséquent, ne touchez jamais les extrémités des fils jaunes et ne laissez pas les deux fils se toucher. Ne laissez pas les deux fils jaunes du câble chauffant entrer en contact avec un composant à l'intérieur de l'appareil.

Toute installation impliquant un câblage de chauffage électrique doit être mise à la terre pour se protéger contre les chocs et les risques d'incendie. Des systèmes appropriés de détection et d'interruption des défauts à la terre doivent toujours être utilisés pour réduire les risques de choc et d'incendie et protéger l'équipement.

Le câblage électrique des éléments chauffants doit être installé conformément aux exigences du National Electrical Code (NEC) et à tous les autres codes électriques locaux et applicables et à toute norme tierce. Suivez les instructions d'installation contenues dans le présent document et celles fournies par le fabricant de l'appareil de chauffage.

Utilisez un disjoncteur GFEP (Ground Fault Equipment Protection) sur chaque circuit de dérivation connecté

au système de fonte des glaces. Étiquetez clairement chaque disjoncteur avec sa fonction. Ceci est d'une importance vitale lorsqu'il existe plusieurs points de déconnexion.

Dimensionnez le disjoncteur en fonction de la taille de la charge attendue. La charge de courant maximale pour le PD Pro est résistive de 30 ampères. Le PD Pro sert souvent de relais de service pilote pour le fonctionnement de contacteurs monophasés ou triphasés à courant élevé dans des applications résidentielles ou commerciales légères. Ce produit est destiné à être utilisé dans des applications résidentielles ou commerciales légères. Pour les installations plus grandes ou plus critiques, la série de panneaux de commande «CMC» de Environmental Technology, Inc., offre une solution rentable offrant une conception de système et des fonctionnalités de performance améliorées.

Assurez-vous que le blindage du radiateur est correctement mis à la terre. Ne pas le faire peut endommager l'équipement ou provoquer un incendie. Après l'installation et avant de commencer à utiliser le système, reportez-vous à et effectuez Tests post-installation décrits dans ce manuel.

WARNING:
Even when the heat tapes are disconnected, if the circuit breaker is on and power is running to the unit, voltage is still being applied to the yellow heat tape leads. Therefore, never touch the ends of the yellow leads or let the two leads touch each other. Do not let the two yellow heat tape leads contact any component inside the unit.

Risque de choc électrique / d'incendie
Même lorsque les rubans chauffants sont déconnectés, si le disjoncteur est sous tension et que l'unité est sous tension, la tension est toujours appliquée aux fils jaunes du ruban chauffant. Par conséquent, ne touchez jamais les extrémités des fils jaunes et ne laissez pas les deux fils se toucher. Ne laissez pas les deux fils jaunes du ruban chauffant entrer en contact avec un composant à l'intérieur de l'unité.

PRODUCT TESTING RECORD

Use this page to record the results of the testing procedures in this manual. Specifically, these are a mega-ohm test following installation of the heat cable, a post-installation test of the control box, and a post-installation test of the system sensor(s). This record will be a useful resource throughout the life of the product.

MEGA-OHM TESTING

(Follow heat cable manufacturer's recommendations or, if not available, use a 500 VDC mega-ohm meter on the heat cable.)

TEST DATE	AMBIENT TEMP	READING (Target: 20 MΩ or greater; Check heat cable manufacturer's documentation.)

POST-INSTALLATION CONTROL TESTING

(Use a voltmeter or clamp-on amp meter on either yellow control lead.)

TEST DATE	AMBIENT TEMP	SUPPLY VOLTAGE (VOLTS) If heat cable is disconnected. (Use voltmeter.) (Target: faceplate voltage)	SYSTEM CURRENT (AMPS) If heat cable is not disconnected. (Use amp meter.) (Target: should be based on heat cable used, consult heat cable supplier; reading must be less than faceplate amps and system breaker sizing)

POST-INSTALLATION SENSOR TESTING

(Use a voltmeter on the leads indicated.)

TEST DATE	AMBIENT TEMP	SENSOR SUPPLY VOLTAGE (VOLTS)	SENSOR CONTROL VOLTAGE	
		RED TO BLACK	WHITE TO BLACK	
		(Target: 23 – 28 VDC)	Warm & Dry (Target: 22 – 28 VDC)	Cold & Wet (Target: less than 2 VDC)

UNPACKING THE UNIT

Immediately upon receipt, inspect the container and packing material for any noticeable damage. Unpack the unit, taking care not to damage the packing materials. Save the shipping container and related materials until normal operation has been established. If the unit must be returned, take care to ensure that it is repackaged as it was received.

As soon as the unit arrives at your facility, inspect it for mechanical damage. If any of the following problems is found, contact Environmental Technology, Inc., Customer Service immediately:

- contents incomplete or incorrect;
- internal or external mechanical damage; or
- defective operation

ETI Customer Service is available between 8:00 a.m. and 5:00 p.m. Eastern Time at (574) 233- 1202 or (800) 234-4239. In the event of shipping damage, keep the packing materials for inspection by the carrier.

RETURNS AND REPLACEMENT PART PURCHASES

Equipment cannot be returned for credit once it has been installed. ETI will repair or replace faulty equipment under warranty. Prior to removal of equipment for warranty return, please contact ETI Technical Support at (800) 234-4239 for troubleshooting assistance.

Before returning a unit to Environmental Technology, Inc., obtain a Return Merchandise Authorization from our Customer Service Department, available between 8:00 a.m. and 5:00 p.m. Eastern Time at (574) 233-1202 or (800) 234-4239. If possible, use the original container and packing materials when packing the unit for shipment. It is important to mark the Return Merchandise Authorization clearly on the outside of the shipping container so that it may be correctly processed upon receipt at Environmental Technology.

For more information about replacement parts or for a replacement Data Sheet or Manual, please visit http://www.networketi.com/.

INVENTORY

Using the information below, verify that the shipping package contains all of the parts listed. Notify Environmental Technology, Inc., Customer Service immediately if there are any discrepancies. Environmental Technology, Inc. Customer Service is available between the hours of 8:00 a.m. and 5:00 p.m. Eastern Time at (574) 233-1202 or (800) 234-4239.

ITEM NUMBER	DESCRIPTION & PART NUMBER
1	**PD PRO**/ PART #23736
2	**ACCESSORY KIT**/ PART #23731
3	**PD PRO INSTALLATION SHEET**/ PART #23735

Depending on the specifics of your order, there will also be up to two sensors included with the system, as well. These will be either the Snow Owl aerial -mount sensor , the GIT-1 gutter ice sensor , or the SIT-6E pavement-mount sensor.

PRODUCT DESCRIPTION

The Snow Switch model PD Pro snow and ice control, when used with up to two compatible sensors, automatically controls snow and ice melting heaters for minimal energy costs. Applications include pavement, sidewalk, loading dock, roof, gutter, and down spout snow/ice melting in commercial and residential environments. The PD Pro control is powered from operating voltages of from 100 to 277 VAC and is rated for 7 amps inductive load. The PD Pro is rated for 30 amps resistive load.

The PD Pro control is housed in an environmentally-sheltered IP 66, NEMA 4X weather-resistant enclosure to provide several installation options.

FEATURES AND BENEFITS

- Compatible with standard Snow Owl, GIT-1, and SIT-6E sensors
- Two sensor input to allow for application specific sensor combination such as:
  - Snow Owl aerial sensor and a GIT-1gutter sensor for roof and gutter deicing
  - Snow Owl aerial sensor and SIT-6 Epavement- mounted sensor for snow melting
- Adjustable 0 - 8 hour hold-on time
- Compatible with the RCU-3 remote control
- Durable IP66, NEMA 4X enclosure
- UL Listed to UL 873 Temperature-Indicating and Regulating Equipment

SELECTING THE PROPER SENSOR

The Snow Switch model PD Pro snow and ice control is designed for use with up to two compatible sensors. Compatible sensors include the Snow Owl (aerial), GIT-1 (gutter) and SIT-6E (pavement) snow and ice sensors . These sensors provide the snow management industry 's most versatile and cost effective snow melting control when used with Environmental Technology control panels. Sensors should be selected to best suit the intended application.

The Snow Owl , GIT-1, and SIT-6E snow and ice melting sensors combine to reliably detect snow and ice in gutter and pavement applications. The Snow Owl sensor may be paired with either the GIT-1 sensor for gutter applications or the SIT-6E sensor for pavement applications. These sensors detect precipitation as snow at temperatures below 38°F (3.3°C). Control panels are signaled only if moisture occurs below this temperature , saving energy and ensuring reliable melting.

Table 1 below presents the recommended sensor combinations for use with the PD Pro snow and ice control.

TABLE 1.
RECOMMENDED SENSOR COMBINATIONS

ONE (1) OR TWO (2) SNOW OWL SENSORS
ONE (1) GIT-1 SENSOR
ONE (1) GIT-1 AND ONE (1) CIT-1 SENSOR
ONE (1) SIT-6E SENSOR AND ONE (1) SNOW OWL SENSOR

For more complete information regarding the sensors and their individual capabilities, refer to the Products link on the ETI website, http://www.networketi.com.

AVAILABLE OPTIONAL COMPONENTS

Prior to installation and set-up, consider two important optional components available for the PD Pro system. Either or both of these optional components must be ordered separately and installed along with the system which facilitates installation and optimizes performance. The first is the Remote Control Unit, RCU-3 (Part Number 21357), for the convenient operation of the system away from the control box. Remote operation is especially useful if the PD Pro is installed in a location not easily or readily accessible by personnel who may be better situated to assess the need to melt ice or snow from walkways or parking areas.

Using the RCU-3, the operator is able to access the full range of system functions and controls from a secondary location: manually set the Cycle Time, equivalent to the Hold-On Time setting on the face of the unit itself, or manually initiate or terminate a heating cycle.

The second optional component for the PD Pro system is the Temperature Sensor Assembly (Part Number 19272). This temperature sensor assembly detects the temperature at the cable end and regulates the Hold-On Time period once precipitation has ended and the call for heat has passed. The sensor is installed with the sensor end (white cap) placed near the heat cable, equidistant between runs (see diagram, page 12). This optional temperature sensor assembly or thermistor is a high-temperature shut-off: it regulates the power to the heat cable by automatically suspending an active heating cycle if, at any time during that cycle, the temperature at the sensor end rises to above 45°F. Then, if, during the Hold-On Time period, the temperature drops to below 44°F, the heating cycle will resume automatically and continue until the end of the Hold-On Time period as set on the face of the unit. This lowers system operating costs while protecting the heat cable from overheating*. The HEAT light will flash to indicate the unit is regulating system temperature. Regulation can occur any time the HEAT light is on.

As the placement of the RCU-3 remote control unit is a key factor in the overall configuration of, as well as customer satisfaction with, the PD Pro system, it is important that it be installed as part of the system initially. Similarly, as the temperature sensor assembly monitors the temperature at the point of the cable end to keep the heat cable from overheating*, so it is necessary, for best results, to lay the temperature sensor at the same time as the heat cable to ensure proper placement and routing. It is not recommended to try and retrofit either of these optional assemblies once the system is already installed and operational.

To ensure proper installation and to facilitate placement, wiring, routing, and function of either or both the RCU-3 or the temperature sensor, it is strongly advised and suggested that these assemblies, whether together or individually, be installed with the system initially rather than retrofitted afterwards. Use the information below to order either or both of these important optional components.

ORDER NUMBER	DESCRIPTION
21357	Optional Remote Control Unit RCU-3

To order either or both of these optional components for your system, contact the Environmental Technology Sales Department between the hours of 8:00 a.m. and 5:00 p.m. Eastern Time at (574) 233-1202 or (800) 234-4239.

*For cables other than self-regulating (SR) heat cable products.

INSTALLING THE CONTROL

Install this unit in compliance with National Electrical Code (NEC) and Canadian Electrical Code (CEC) standards, as well as all other local and applicable electrical codes for your area. Prior to beginning installation, make sure that the facility has properly sized electric service and breaker. For additional information regarding electrical ratings and facility power requirements, refer to the Specifications section of this manual.

This unit is intended for wall mount installation only. The wall used for the installation should be capable of supporting four times the weight of the unit, or about 20 pounds. Install the unit directly to a solid, stable surface. The IP 66, NEMA 4X weather-resistant enclosure can be installed either inside or outside.

Internal connections for any optional remote control unit or system sensor(s) will be made in the next section. The dimensions shown in the Top View of Figure 1 below are for the mounting hole location footprint and run from centerline to centerline of the four slotted mounting holes. The dimension shown in the Right Side View of Figure 1 is from the bottom of the enclosure to the top of the clear plastic lid and shows the distance that the unit will protrude from the mounting surface.

Figure 1: **PD Pro Mounting Hole Footprint**

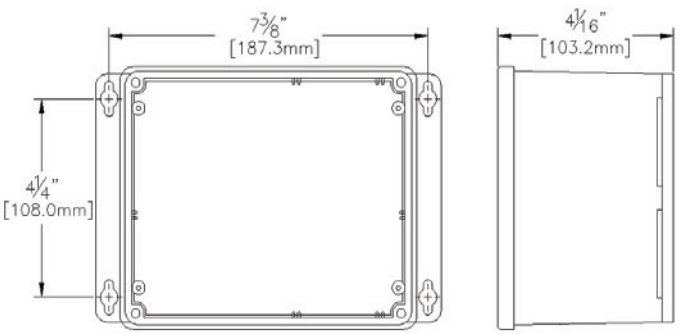

CONTROL BOX INSTALLATION

During installation, leave all mounting hardware loose enough to allow for slight adjustments to component placement. Once all components and the front panel and clear plastic cover have been installed, then, as the final step in installation, fully tighten all mounting hardware and weather-tight fittings. Make sure all connections and fittings are snug, air-tight, and water-tight.

1. Use the box as a template to determine the mounting hole footprint pattern. Hold the unit up against the wall onto which it will be mounted, with the mounting blocks against the wall, then mark the wall at the locations of the slotted mounting holes to determine the location of the mounting holes on the wall.

2. As desired, to hold the box in place during the installation process, you may loosely install one or both of the top mounting bolts as the remaining holes are marked. To ensure accurate and level installation, however, do not fully tighten any of the mounting hardware until all hardware has been started.

3. Once the four mounting holes have been located and marked, install the box to the wall using properly sized mounting hardware. Be sure to use mounting hardware appropriate for the job, heavy-duty and long enough to fasten the unit securely to the mounting surface. Make sure to use all four mounting holes. Because conduit will also be installed to protect the cables running from the control box, install the box, but leave the mounting hardware loose enough to work the conduit into place. The conduit will be installed later in this process, at which time all mounting hardware will be securely tightened.

PREPARATION AND SYSTEM SET-UP

Install the conduit, system sensor(s) and sensor cables, heater cables, and power cable. Refer to Figures 2 and 3, as well as Table 2. Remove the clear plastic unit cover and face plate to access the inside of the unit. These will be replaced at the end of the installation process. A post- installation test will be performed in the next section to verify proper function.

NOTE: *During installation, leave all mounting hardware loose enough to allow for slight adjustments to component placement. Once all components and the front panel and clear plastic cover have been installed, then, as the final step in installation, fully tighten all mounting hardware and weather-tight fittings. Make sure all connections and fittings are snug, air-tight, and water-tight.*

INSTALLING THE SENSOR(S)

Refer to the enclosed Installation Sheet(s) and Instruction Manual(s) for sensor installation and operating instructions.

INSTALLING THE SENSOR CABLES

Route the sensor cables through the weather-tight connection ports on the right side of the unit, then connect the red, black, and white leads to the front panel PC board terminal block J1 terminals. If using two sensors in the system, even if they are of the same type, it does not matter which one is wired into which set of terminal blocks, upper or lower. After connecting the red, black, and white leads, push a little more of the cable into the connection port to create a little more slack to relieve some of the tension from the wires at the point of the terminal strip, then fully tighten the weather-tight connection to secure the cable in place. If installing an extension onto the sensor cable(s), a junction box is required in accordance with applicable code.

INSTALLING THE HEATER CABLES

Lay-out, configure, and install the system heater cables in accordance with National Electrical Code (NEC) or Canadian Electrical Code (CEC) and manufacturers' requirements, as well as all other local and applicable building and electrical codes. Make sure to properly seal and waterproof all cable runs. If using a SIT-6E pavement-mount sensor, position the heater cabling so it does not interfere with the sensor wiring.

Upon conclusion of heater cable installation, perform a mega-Ohm or "megger" test on the heater cables as directed by the heater cable manufacturer. Record the results on page 2 of this manual and retain for future reference.

INSTALLING THE OPTIONAL COMPONENTS

Route the remote control (RCU-3) cables through the conduit then into the enclosure. Connect the remote cables to the front panel PC board terminal block J1 terminals labeled REMOTE.

Route the optional temperature sensor assembly wiring through the same conduit as the RCU-3 cable then into the enclosure. Connect the temperature sensor assembly cables to the front panel PC board terminal block J1 terminals labeled AUX.

INSTALLING THE POWER CABLE

With the circuit breaker off, install the power cable. As shown in the wiring charts, the power cable is provided by the customer. Size the cable for a 30 Amp maximum load. Run the cable through conduit and connect the leads to the control box wiring. The line is black, neutral is white, and ground is green. The unit has no power switch so remember that power is running to the system as soon as power is applied.

SYSTEM SCHEMATIC DIAGRAMS

This manual refers to the Snow Switch® Model PD Pro control panel manufactured since October 31, 2013, which uses a universal (100 – 277 VAC; 50/60 Hz) power supply. Older units use a voltage-specific power supply and have different wiring configurations.

Figure 2 is a schematic diagram of an entire PD Pro system, including the available optional components.

FIGURE 2. Representative PD-Pro System Schematic

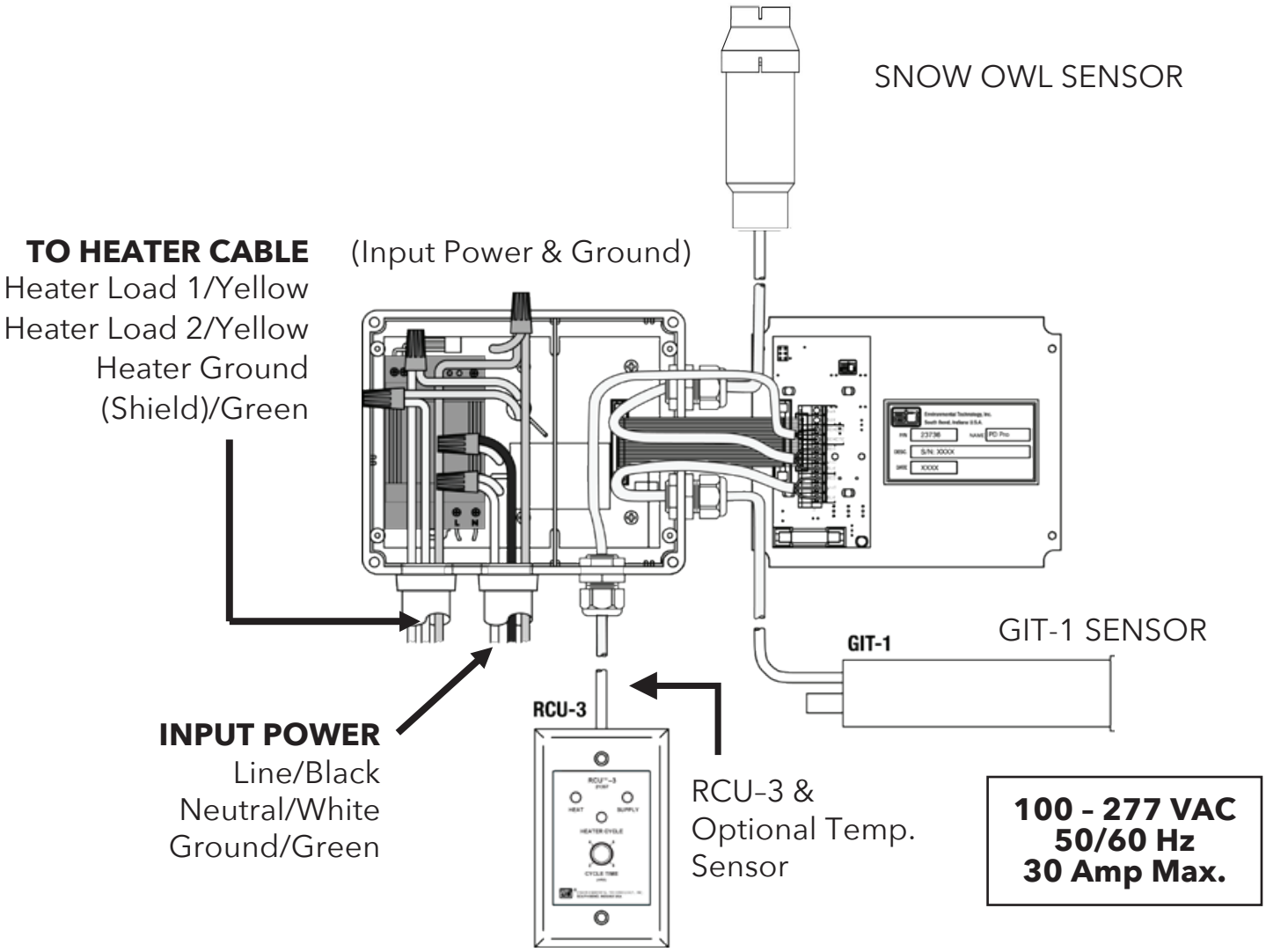

TABLE 2. Cable Ratings & Connections

POWER Cable (provided by customer)	Size for 30 Amp maximum load
SENSOR Wiring	#18 AWG jacketed, 3-conductor
HEATER Cable (provided by customer)	Size to system load
REMOTE Wiring	#22 AWG jacketed, 2-conductor
TEMPERATURE SENSOR ASSEMBLY Wiring	#22 AWG jacketed, 2-conductor

	WIRE LEAD	CONNECT TO
INPUT Power (provided by customer)	Line 1	Black
	Line 2 / Neutral	White
	Ground	Green
OUTPUT To Heater (provided by customer)	Heater Load 1	Yellow
	Heater Load 2	Yellow
	Heater Ground (Shield)	Green

FIGURE 3. Representative SIT-6E Pavement Installation

A representative schematic diagram of an SIT-6E pavement sensor installation is shown below in Figure 3. Note how the heat cable and other components do not cross.

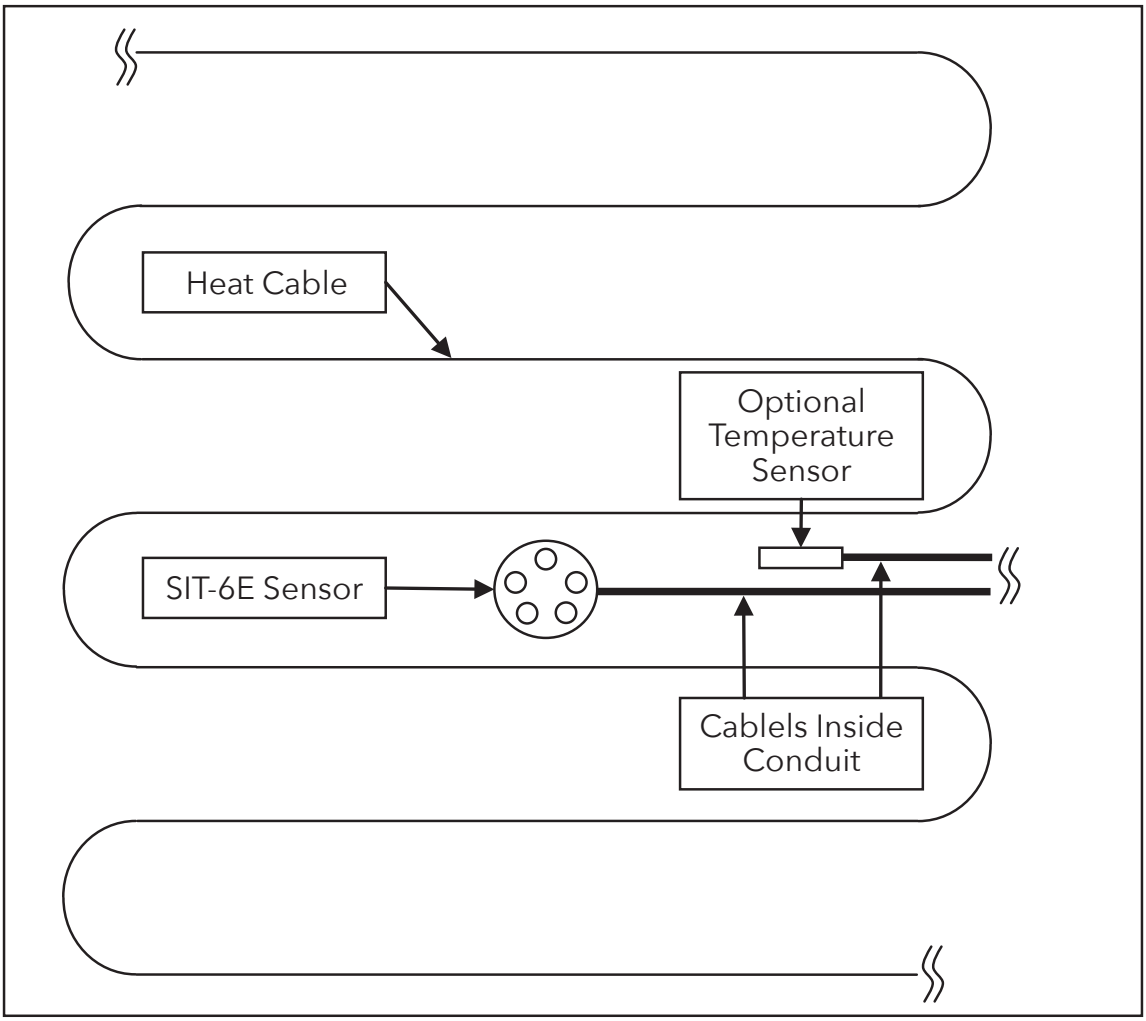

FIGURE 4. The PD Pro Front Panel PC Board

Refer to Figure 4 for useful information regarding the front panel PC board.

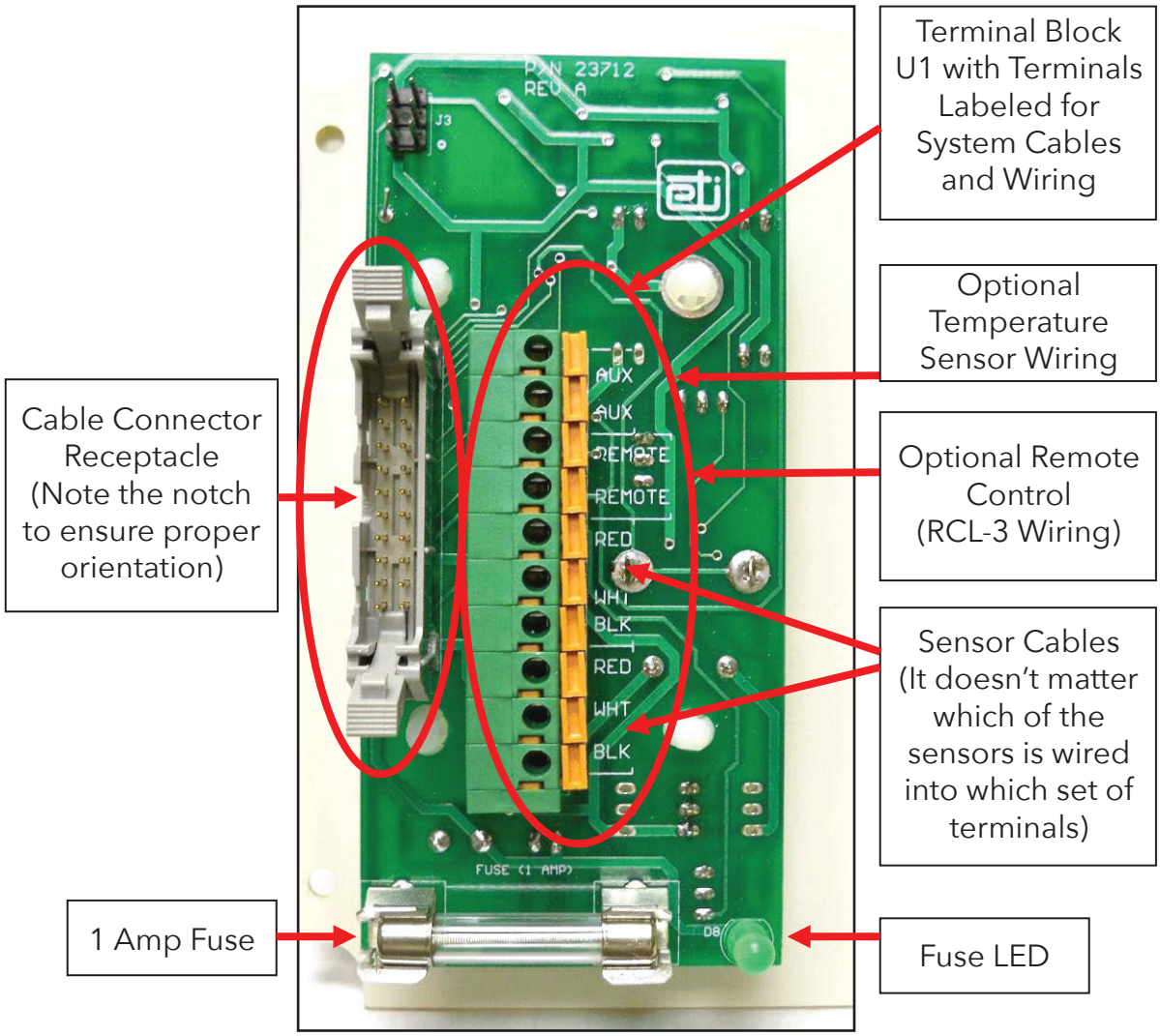

POST-INSTALLATION TESTING

Installation errors cause the majority of system problems. Therefore, thoroughly check the system before placing it into service. Simple electrical tests and visual inspection can identify any wiring errors, as well as improper waterproofing. Visually inspect for proper wiring and waterproofing, making sure that all box joints are sealed and that all wiring is properly terminated.

In performing the post-installation test procedure as described below, the heat cable will activate, even if only for a brief time, so that system performance can be accurately simulated and measured. For that reason, and depending specifically on the ambient temperature or general conditions in which the system is being installed, it is recommended to continuously and carefully monitor the system and its components during the entire testing process. High temperatures can cause damage to asphalt and similar paving materials. Never leave the site during testing. Never leave the system unattended during testing. If fire or smoke or an abnormal odor is observed during testing, shut off power to the system and suspend the test.

To most accurately simulate and measure system performance, leave the heat cable connected to the control during testing and use a clamp-on amp meter as directed in this procedure. Using the clamp-on amp meter clamped around the wires prevents the operator from having to touch bare or exposed metal or wiring and also keeps the operator from having to break the circuit, all while still allowing the accurate simulation and testing of the system, including the Ground Fault Equipment Protection circuitry, if your system is so equipped.

It is the responsibility of the on-site installer to assess the overall safety concerns at the site and to disconnect the heat cable, as necessary or desired, whether before or during this test, as well as to re-establish those wiring connections at the conclusion of this procedure.

WARNING

Even when the heat cables are disconnected, as long as the circuit breaker is on and power is running to the unit, voltage is still being applied to the yellow heat cable leads. Therefore, never touch the ends of the yellow leads or let the two leads touch each other. Do not let the two yellow heat cable leads contact any component inside the unit.

This procedure requires a clamp-on amp meter or voltmeter. Make sure the gutter and downspout are both dry before testing the GIT–1 sensor. Record test results in the appropriate section on page 2 of this manual for future reference.

CONTROL TESTING

1. Remove system power. There may be two or more points of disconnect.

2. Open the clear plastic cover and remove faceplate from the unit. Retain all parts and mounting hardware. If the heaters have been disconnected for testing, using a voltmeter, measure the voltage across the two yellow leads. If the heaters have not been removed tor testing, using a clamp-on amp meter, measure the current through the yellow lead.

3. Restore power to the unit. After a brief initialization routine, the SUPPLY LED should be on, but no other LEDs. Once initialization is complete, the amp meter or voltmeter should read 0.

4. With power still running to the unit, turn up the Hold-On Time dial to a setting higher than 0, then press the Heater Cycle button. The HEAT LED should come on and the amp meter should show a reading of less than the maximum system load as shown on the faceplate. The voltage across the yellow leads will match the system voltage.
   Do not touch the yellow lead ends.

5. Press the Heater Cycle button again. The HEAT LED will go off and the amp meter reading should drop back to 0 or the voltage will drop to 0. Record results on page 2 of this manual.

6 Remove the amp meter or voltmeter. Do not yet re-install the unit front plastic cover or faceplate.

7 Proceed to sensor testing on the following page.

SNOW OWL **AND GIT-1 SENSOR TESTING**

The SNOW OWL and GIT-1 sensors have two interrelated systems: the temperature sensing system and the moisture detection system. Complete testing of the sensor involves manipulation of both. The tools needed for this procedure are a voltmeter and an aerosol circuit cooler ("Freeze Spray" is preferred) or cup of ice water. The Freeze Spray is available at most electric supply stores.

Ensure that the moisture sensing grid on the sensor is clean and dry.

Follow the steps below to perform the SNOW OWL and GIT-1 sensor post-installation test procedure.

1 Connect the voltmeter across the black and red leads from the sensor (low-voltage wiring terminals at the control). Connect the black test lead to the black wire. You should obtain a reading of 23 to 28 VDC. Now, check the reading across the black and white sensor leads. You should read 22 to 28 VDC with a warm (above 38°F) and dry sensor. Both the SNOW LED and HEAT LED should remain off.

2 Cool the temperature probe of the sensor with the Freeze Spray. You should see frost form on the temperature probe. Alternately, place the temperature probe in ice water. The SNOW LED and HEAT LED should remain off.

3 Using a moist finger, touch the moisture sensing grid on top of the sensor. Both the SNOW LED and HEAT LED should come on and the voltage between the white and black sensor leads should be less than 2 VDC.

4 With the unit cold and the sensing grid moist, allow the unit to warm up to above 38°F. The SNOW LED should turn off and the HEAT LED should stay on and the voltage should return to 22 – 28 VDC. Record results on page 2 of this manual.

5 If testing a SIT-6E sensor, proceed to the next section now. If testing is complete, with unit powered off, restore all wiring connections and re-install the face plate and clear plastic cover. Set the Hold-On Time control dial to the desired setting.

SIT-6E SENSOR TESTING

If paving material or other residue adheres to the sensing elements, clean the surface with a ScotchTM Brite Pad. Avoid using metallic or coarse abrasives or detergents.

Regardless of weather conditions, the functional operation of an installed SIT-6E sensor can be determined using a digital voltmeter (DVM) and a 10-pound (4.54kg) bag of crushed ice as described below.

1 With the DVM set to the 100 VDC range, verify the sensor supply voltage by connecting the negative (-) test lead to the sensor black wire and the positive (+) test lead to the sensor red wire. A DVM reading between 23 and 28 VDC is acceptable.

2 With the negative (-) test lead remaining in place, reconnect the positive (+) test lead to the sensor white wire and confirm there is 22 to 28 VDC present. Both the HEAT LED and the SNOW LED should be off.

3 Place the entire contents of the bag of crushed ice on top of the sensor and allow a time lapse in excess of 20 minutes before observing that less than 2 VDC is indicated by the DVM. Depending on ambient conditions, however, this might take only a few minutes, in which case, that is not a problem. (A nominal temperature below 38°F or 3.3°C must be

4 detected before the sensor's normally-open contact is closed. If the sensor surface temperature was excessive prior to beginning this procedure, it will be necessary to extend the cool-down time interval by as much as an additional 20 minutes.) Most importantly, make sure both the HEAT LED and the SNOW LED come on. Record results on page 2 of this manual.

5 With satisfactory results, control and sensor pre-operational testing is now complete. Disconnect and remove all testing devices from the system.

6 Once all post-installation testing is complete and with unit power off, restore all wiring connections.

7 Re-install the face plate and clear plastic cover onto the control. Set the Hold-On Time control dial to the desired setting.

OPERATION

This section presents operating instructions for the unit and begins with a picture of the front panel. Refer to Figure 5. Note the system information on the left side of the panel, as well as the operator controls and indicators located on the right side of the panel. The controls and indicators are explained in this section.

Note that because the unit has no ON/OFF power switch, power runs to the unit as soon as facility power is connected to it. For as long as power is running to the unit, the green SUPPLY LED will always be lit. The unit initiates a heating cycle when the system sensor(s) detect snow or ice at or below 38°F (3.3°C).

Upon initial Start-Up, all of the LEDs will come on for 2.5 seconds, and then shut off for 2.5 seconds. After this, the device goes into normal operation.

FIGURE 5. The PD Pro Front Panel

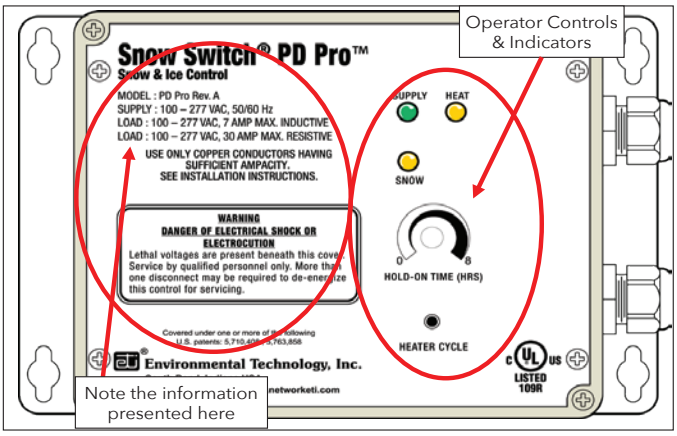

OPERATOR CONTROLS & INDICATORS

Operator controls and indicators are explained below. Refer to Figure 6 on the following page.

SUPPLY The SUPPLY LED lights up and stays lit as long as power is running to the unit, whether it is currently in a heating cycle or not.

HEAT When the HEAT LED is lit, the unit is currently engaging power to the heater outputs in response to sensor input. The HEAT LED stays on for the duration of the heating cycle. As desired, press the Heater Cycle button to stop a current heating cycle, unless the SNOW LED is lit.

SNOW The SNOW LED lights up when any of the sensors detect snow or ice at or below 38°F (3.3°C) and stays on until the sensors no longer detect snow or ice or the temperature surpasses 38°F (3.3°C). Note that the Heater Cycle button cannot be used to cancel a current heating cycle if the SNOW LED is lit.

FIGURE 5. The PD Pro Front Panel

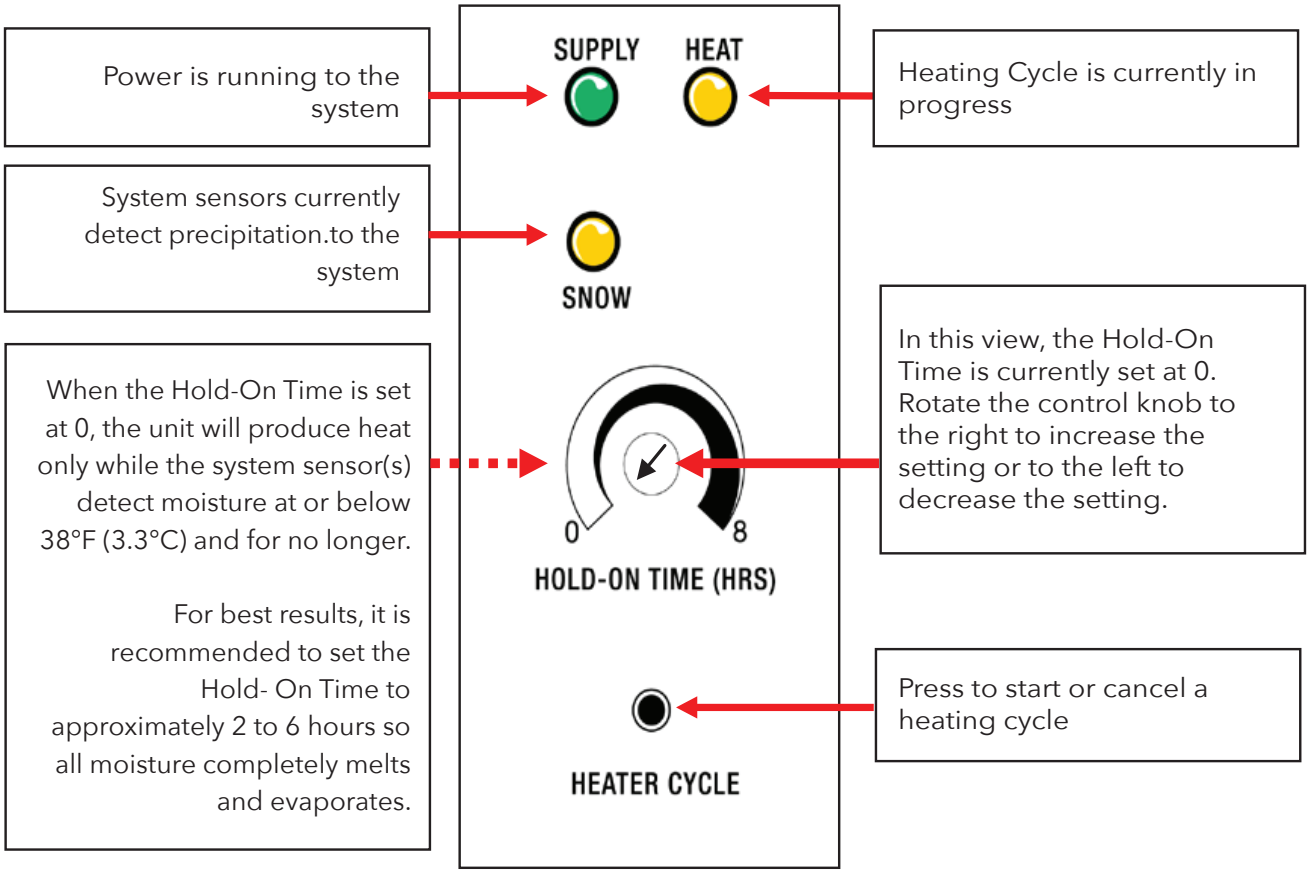

SETTING THE HOLD-ON TIME

Heating action begins a few seconds after the sensor detects moisture at or below 38°F (3.3°C). However, heating action continues even after the sensor no longer detects moisture based on the Hold-On Time setting. The Hold-On Time control knob allows you to set the length of time the unit will continue heating even after the sensor no longer detects moisture. This is beneficial because it typically takes longer for ice to melt than it took to form initially and also because it keeps moisture from re-freezing before it has fully evaporated. As indicated on the front panel, the Hold-On Time can be set for anywhere from 0 to 8 hours as indicated by the arrow on the control knob. Note that if the Hold-On Time control knob is set at 0 (as shown in Figure 5), the unit will produce heat only for as long as the sensor detects moisture but for no longer. For that reason and to ensure more effective heating, it is recommended that the Hold-On Time be set up closer to the mid-way point, corresponding to about 2 to 6 hours.

Set or increase the Hold-On Time as desired by rotating the control knob to the right or clockwise. Decrease the Hold-On Time setting by rotating the control knob to the left or counterclockwise. Again, remember that if the Hold-On Time control knob is set at 0, the unit will produce heat only for as long as the system sensor(s) detect moisture and no longer.

USING THE HEATER CYCLE BUTTON

The Heater Cycle control button allows you to manually initiate a heating cycle regardless of weather conditions, whether or not the sensor currently detects moisture, and regardless of the temperature. The Heater Cycle control button also allows the operator to cancel a heating cycle currently in progress, regardless of the Hold-On Time setting, unless the SNOW LED is on, indicating the sensor currently detects moisture at or below 38°F (3.3°C). Remember, if you manually initiate a heating cycle by pressing the Heater Cycle button, that heating cycle will last for the duration of the current Hold-On Time setting, unless manually cancelled by pressing the Heater Cycle a second time.

It is not necessary for the Hold-On Time setting on the control box and the Hold-On Time setting on the RCU to be identical. Note, however, that if a heating cycle is manually started by pressing the Heater Cycle button on the control box, that the resulting heating cycle will last as long as the Hold-On Time setting on the control box. Similarly, if a heating cycle is initiated using the RCU, the resulting heating cycle will last as long as the Hold-On Time setting on the RCU.

OPTIONAL REMOTE CONTROL OPERATION

The PD Pro can be operated either "locally" on the face of the unit itself or by using the optional remote control unit, RCU–3. Refer to Figure 7.

FIGURE 7. Remote Control Unit RCU-3

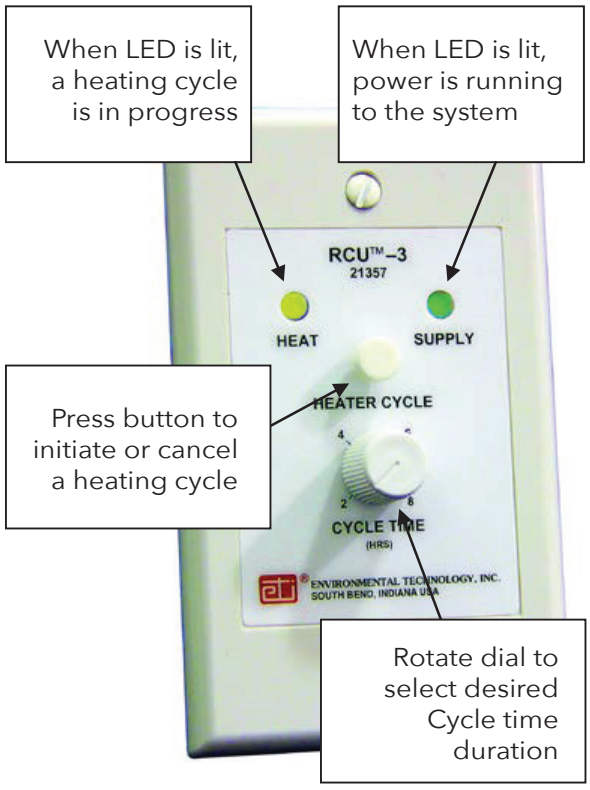

The RCU Cycle Time control dial moves in discrete increments rather than in a continuous motion as on the control box. Cycle Time on the RCU applies only to a manual heating cycle initiated at the RCU, not the Cycle Time setting on the control box. The RCU cannot be used to manually cancel a heating cycle which was manually set on the control box.

To manually start a heating cycle, press the RCU Heater Cycle control button. The RCU HEAT LED light will come on. This will start a heating cycle which will last as long as the RCU Cycle Time setting. To manually cancel a current heating cycle which was manually set at the RCU, press the RCU Heater Cycle button. The RCU HEAT LED light will go out. To use the RCU to change the duration of a heating cycle, rotate the RCU CYCLE TIME control dial to the desired setting, either higher or lower.

MAINTENANCE

To ensure the best function and results, it is recommended to always keep the area around the sensors clean from debris and general obstructions to maximize the ability of the sensor to do its job. Clean the sensor using a cleansing pad and water. Keep the gutters clean and the area around the sensor free of leaves or other debris which could limit the ability of the sensor to detect the conditions necessary for optimum system performance. Finally, once monthly, visually inspect the fuse LED located on the front panel circuit board to make sure it's on. If the fuse LED is not on, change the fuse.

TROUBLESHOOTING
FLOWCHART 1

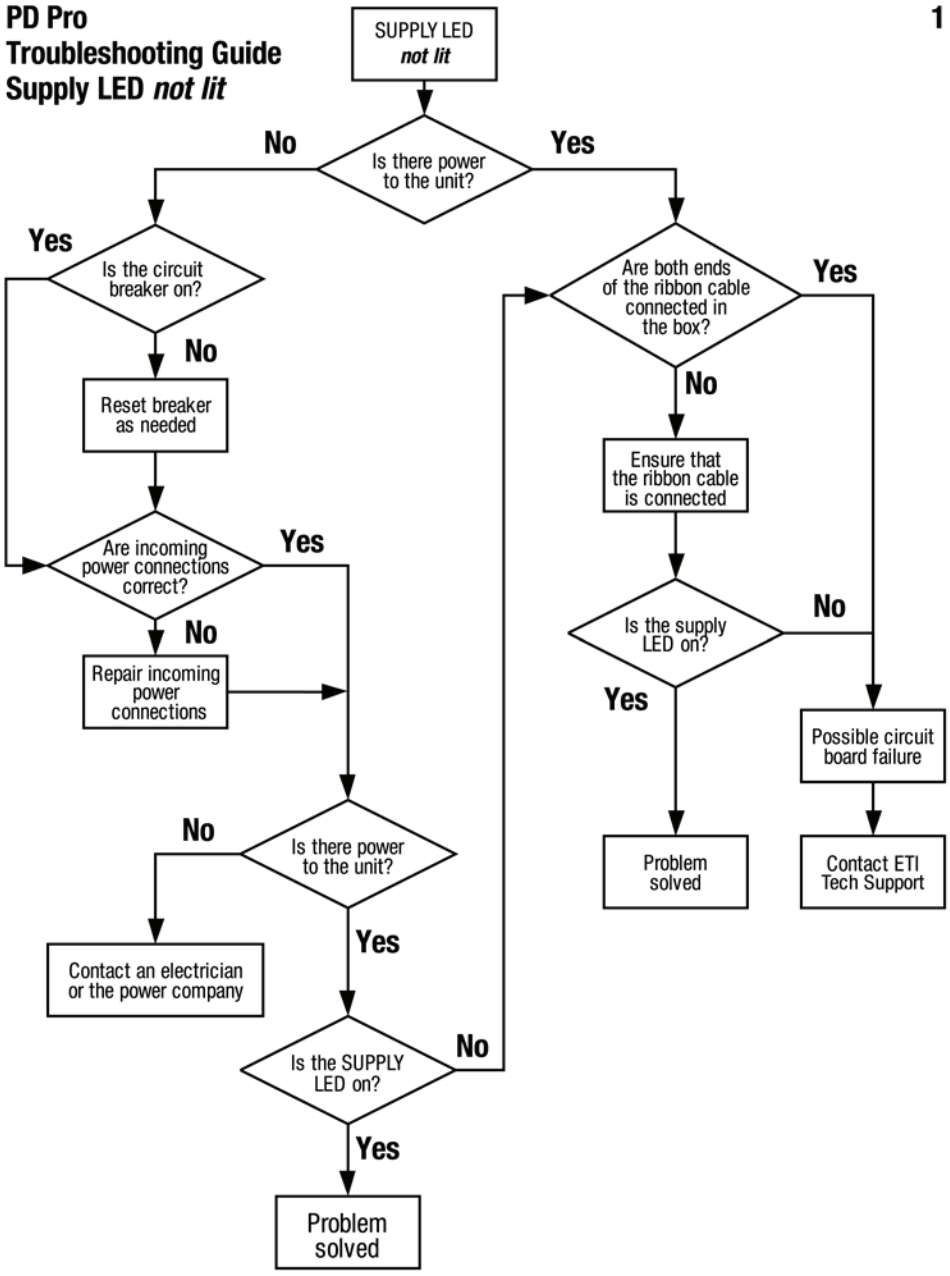

TROUBLESHOOTING FLOWCHART 2

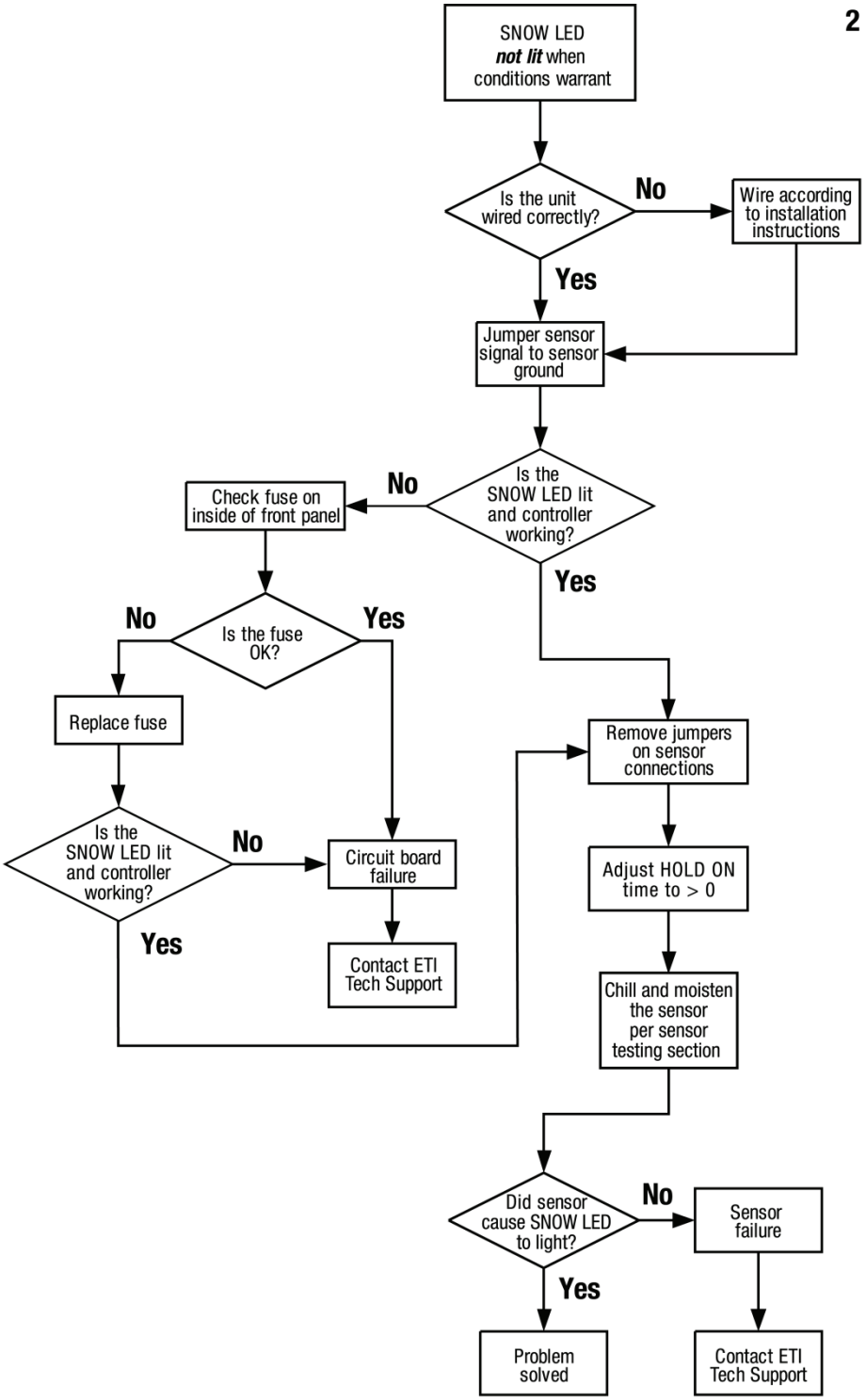

TROUBLESHOOTING FLOWCHART 3

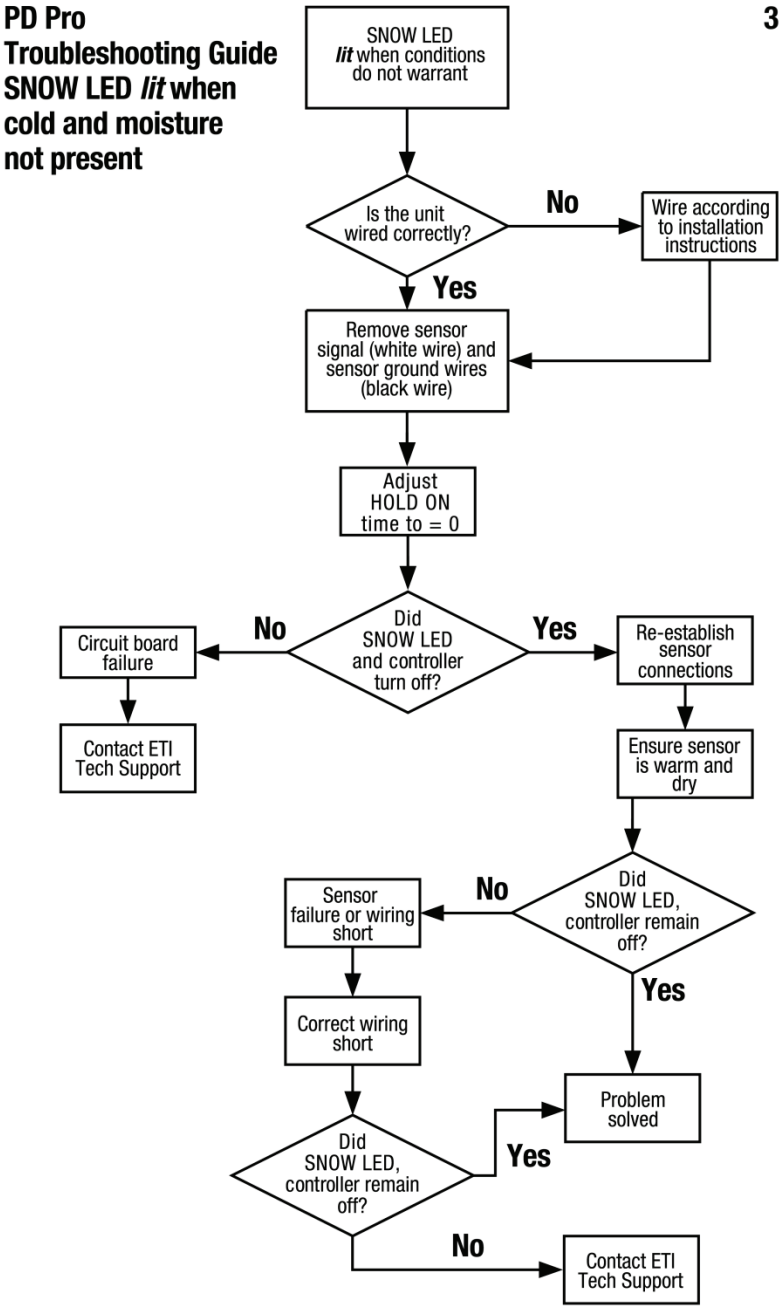

TROUBLESHOOTING FLOWCHART 4

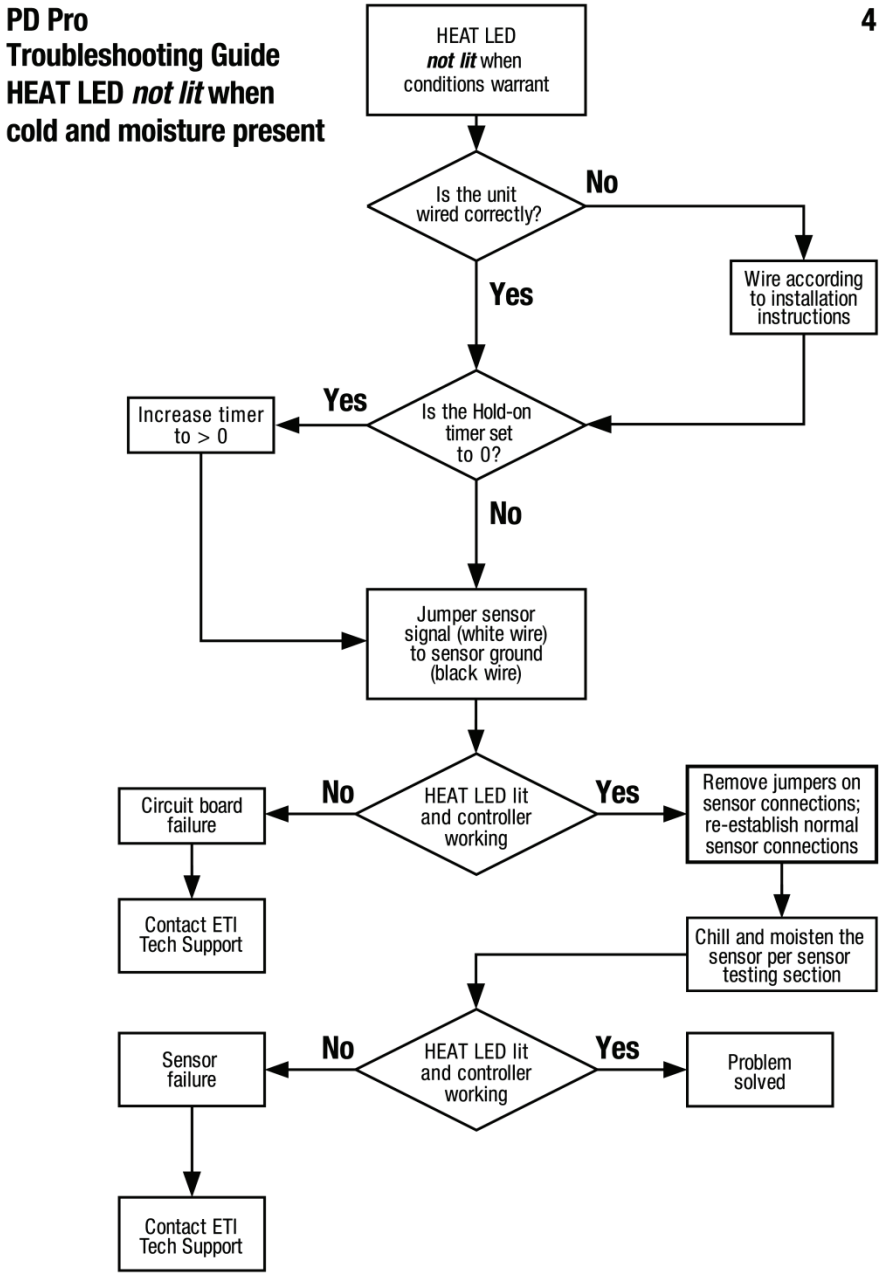

TROUBLESHOOTING FLOWCHART 5

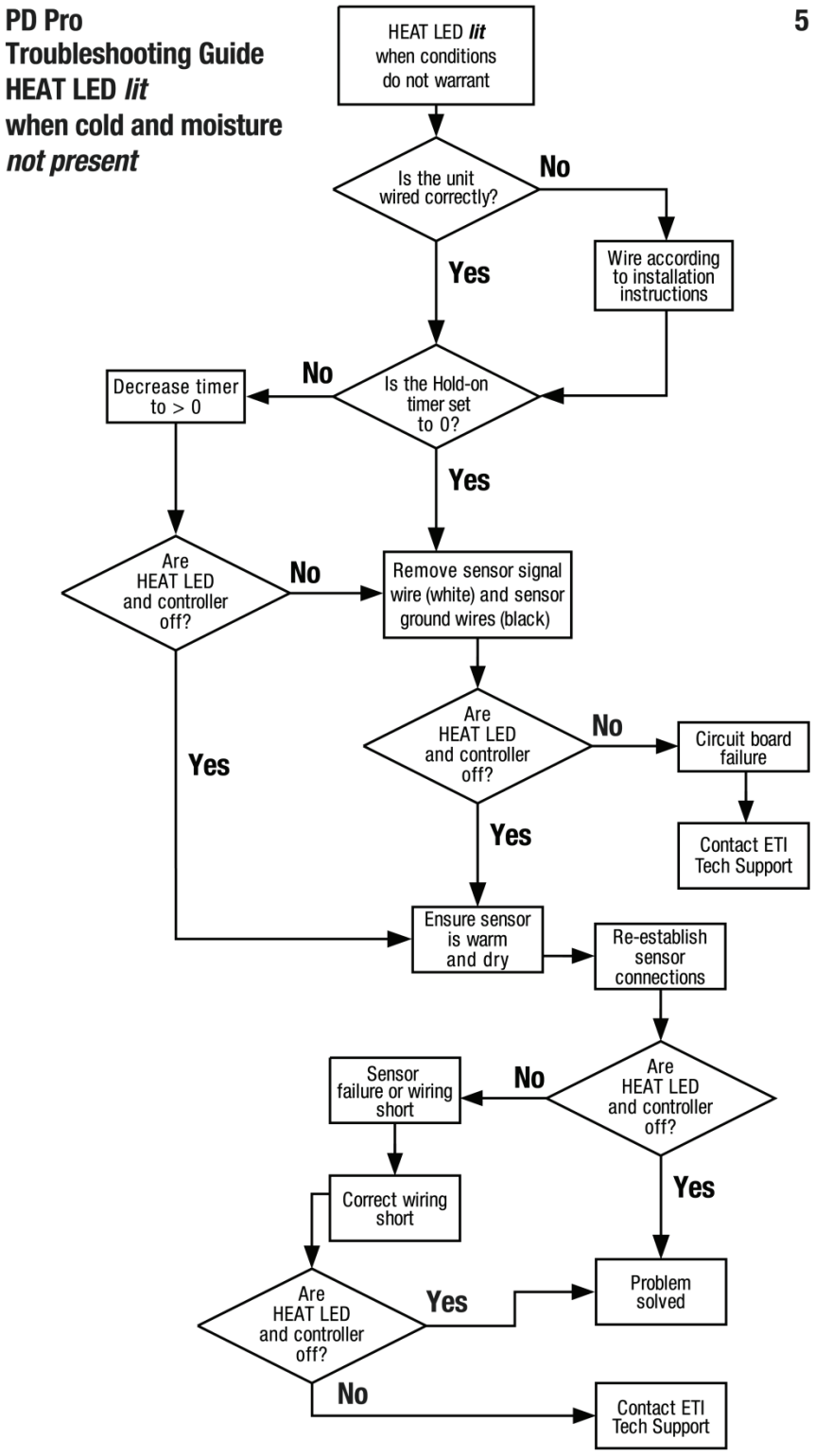

HEATER CONNECTION

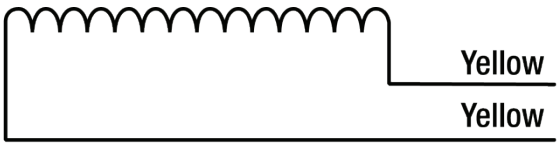

SWITCHING DUTY

For single heater loads
of 30 amps or less.
Heater should be rated
for the same voltage
as the input to the PD Pro

Heater voltage ***must***
equal input voltage

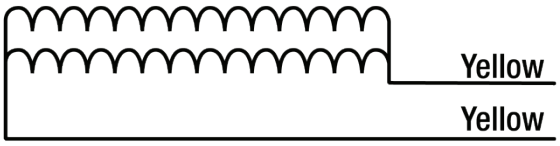

PARALLEL LOADS

Parallel loads in switching duty
are allowed as long as
total current ***does not***
exceed the 30 amp ratings

Total parallel current
cannot exceed
control panel
specifications

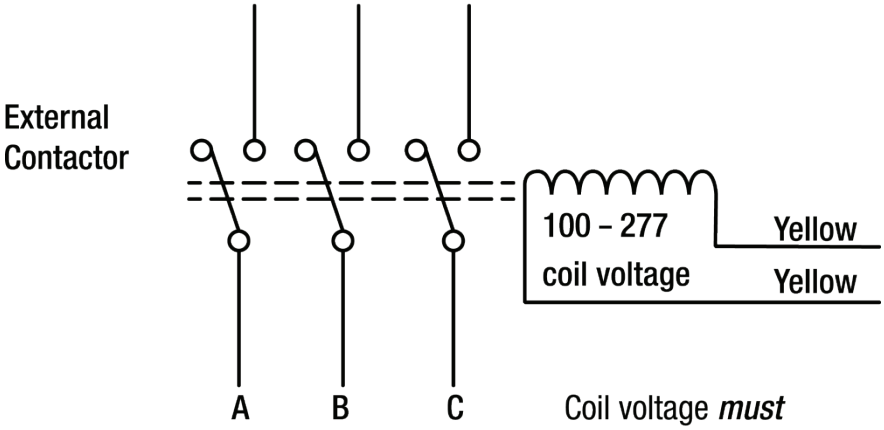

PILOT DUTY

For load voltages and currents
in either single or three phase
applications in excess of 30 amps

Must have GFEP breakers

Coil voltage ***must***
equal input voltage

SPECIFICATIONS

GENERAL

Areas of Use	Nonhazardous
Approvals	c UL us LISTED 109R Type 873 Temperature Regulating Equipment

ENCLOSURE

Protection	IP66, NEMA 4X
Dimensions	5 1/2" (L) x 8 1/8" (W) x 4 3/8" (H) 140mm (L) x 207mm (W) x 112mm (H)
Material	Polycarbonate
Material	Polycarbonate cover, machine screws
Weight	3 pounds (control box with no sensor)
Mounting	Wall Mount

CONTROL

Status Indicator (Light Emitting Diode (LED) color)	SUPPLY (green): Power on HEAT (yellow): Heating cycle in progress SNOW (yellow): Sensor(s) detect snow

WIRE AND CABLE RATINGS

Power is running to the system	100 – 277 VAC; 50/60 Hz
Heater or Pilot Duty Contactor	100 – 277 VAC; 30 Amp Maximum Resistive Load 7 Amp Maximum Inductive Load

Power Cable	Size for heater load (30 Amp maximum)
Sensor Wiring	#18 AWG jacketed, 3-conductor
Heater Cable	Size for maximum heater load
Remote Wiring	#22 AWG jacketed, 2-conductor
Temperature Sensor Wiring	#22 AWG jacketed, 2-conductor

GENERAL

Operating Temperature	–31°F to 113°F (–35°C to45°C)
Storage Temperature	–67°F to 167°F (–55°C to 75°C)

ORDERING INFORMATION

Order Number	Description
23736	PD Pro
24893	PD Pro
24455	PD Pro Installation Sheet
23735	PD Pro Instruction Manual (this document)
23731	Accessory Kit
21357	Optional Remote Control Unit RCU-3
25516	SNOW OWL-1 Aerial Snow Sensor
11351	GIT-1 Gutter Ice Sensor
24219	SIT-6E Pavement-Mounted Snow/Ice Sensor

QUESTIONS & COMMENTS

For technical help, questions, or comments concerning this product or any of Environmental Technology, Inc., products, contact the Customer Service Department between 8:00 a.m. and 5:00 p.m. Eastern Time at:

VOICE:
(800) 234-4239 (USA and Canada)
(574) 233-1202 (elsewhere)

FAX:
(888) 234-4238 (USA and Canada)
(574) 233-2152 (elsewhere)

E-MAIL:
info@networketi.com

DISCLAIMER

ETI makes no representations or warranties, either expressed or implied, with respect to the contents of this publication or the products that it describes, and specifically disclaims any implied warranties of merchantability or fitness for any particular purpose. ETI reserves the right to revise this publication and to make changes and improvements to the products described in this publication without the obligation of ETI to notify any person or organization of such revisions, changes or improvements. No part of this manual may be reproduced or translated in any form or by any means, electronic or mechanical including photocopying and recording, for any purpose without the express written consent of ETI.

The ETI logo, We Manage Heat, Snow Switch, CIT, GIT, and SIT are registered trademarks of Environmental Technology, Inc. PD Pro and RCU are trademarks of Environmental Technology, Inc.

Copyright © 2019 ETI. All rights reserved.