LIMITED WARRANTY

The DS-9C is warranted against defects in workmanship and materials for two years from date of sale. This warranty does not apply to damage resulting from accident, misuse, or alteration nor where connected voltage is more than 5% above the configured operating voltage, nor to equipment improperly installed or wired or maintained in violation of this Owner's Manual. No other written or oral warranty applies. No employee, agent, dealer or other person is authorized to give any warranties on behalf of ASE.

Units returned for warranty repair cannot be modified from shipped condition and leads must protrude a minimum of 6 inches from the base conduit hub. Repair costs of a modified unit will be quoted as the unit must be returned to the original, unmodified condition prior to return shipping. The customer shall be responsible for all costs incurred in the removal and/or reinstallation and shipping of the product for repairs. Within the limitations of this warranty, inoperative units should be returned, freight prepaid, to ASE, and we will repair or replace, at our option, at no charge to you with return freight paid by ASE to destinations within the U.S. and Canada. It is agreed that such repair or replacement is the exclusive remedy available from ASE and that ASE IS NOT RESPONSIBLE FOR DAMAGES OF ANY KIND, INCLUDING INCIDENTAL AND CONSEQUENTIAL DAMAGE. Some states do not allow the exclusion or limitation of incidental or consequential damages so the above exclusion may not apply to you. The warranty gives you specific legal rights, and you may also have other rights which vary from state to state.

Input: 100-277 VAC +/- 5%, 47-63 Hz
Control: 2 x 277 VAC @ 30A
Operating Temp: -40°C to +85°C

AUTOMATED SYSTEMS ENGINEERING, INC.
2833 N EL PASO ST STE 100
COLORADO SPRINGS, COLORADO 80907
PHONE: 719-599-7477
Visit us on the Internet at: www.goase.com



Need Indoor Monitoring & Control?
Take a Look at the ASE CDP-2

Simple Installation & Operation at a Competitive Price
Approved CS-xxx Interface Cable and EX-50 Sensor Extension Kits Are Also Available
Visit www.goase.com for more information

CAUTION: Read all instructions carefully before installation.
Save this Installation Manual for future reference.

DS-9C

RAIN/SNOW SENSOR CONTROLLER

INSTALLATION MANUAL

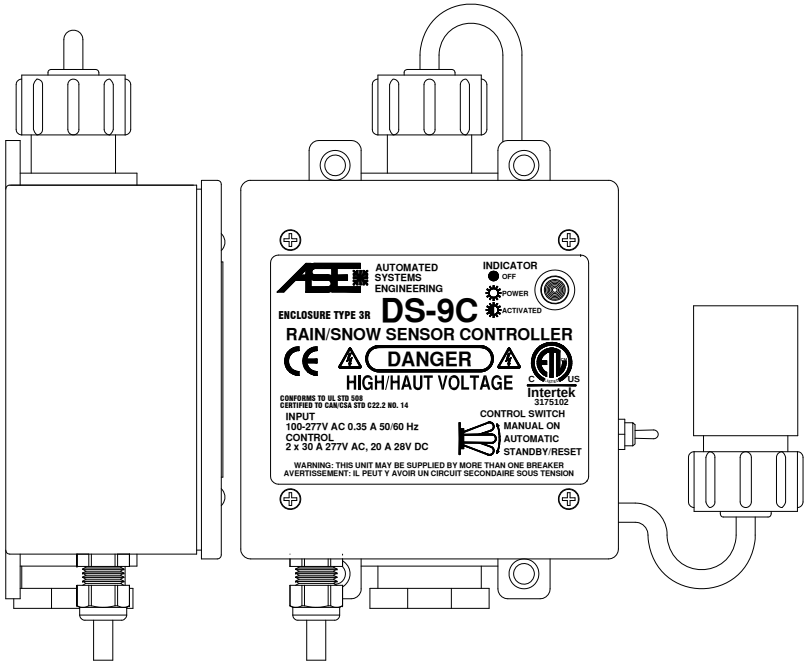

Manufactured By

AUTOMATED SYSTEMS ENGINEERING

2833 N El Paso Street Ste 100 Colorado Springs, Colorado 80907

General Safety Instructions

1. THIS UNIT SHOULD BE INSTALLED, OPENED, AND REPAIRED BY QUALIFIED PERSONNEL ONLY!

   CETTE UNITÉ DEVRAIT ÊTRE INSTALLÉE, OUVERTE, ET RÉPARÉE PAR LE PERSONNEL QUALIFIÉ SEULEMENT!

2. To avoid shock hazard do not open the front cover with power connected to the DS-9C or any controlled equipment.

   Pour éviter la décharge électrique déconnectez toute la puissance avant d'ouvrir la couverture du DS-9C.

Selecting a Mounting Location for the DS-9C

The small corded device with the interleaved grid is the remote precipitation or "moisture" sensor. The brass cylinder protruding from the bottom of the DS-9C enclosure is the temperature sensor. For reliable rain and snow detection the moisture sensor must be exposed to a clear view of the sky. Reference Page 3 "Moisture Sensor Mounting & Termination" for guidance in mounting the DS-9C moisture sensor. For proper temperature detection the DS-9C enclosure must be mounted outdoors, away from furnace vents, dryer vents, and other sources of heat. When powered, the DS-9C moisture grid will always remain hot. This is normal. This allows the sensor to continuously melt/evaporate rain and snow from the grid.

The DS-9C enclosure can be mounted by screwing the base conduit hub onto an appropriate size free-standing conduit or by using the mounting holes in each corner of the enclosure.

DO NOT DRILL HOLES THROUGH THE ENCLOSURE FOR MOUNTING!
Ne Font Pas Les Trous De Foret Par La Boîte Pour Le Support!

This can allow water into the enclosure causing a potential shock hazard. It is recommended that a weatherproof junction box be mounted below the DS-9C for termination of the power and load pigtails to the building wiring.

Use Care When Replacing the Front Cover. Do Not Pinch the Gasket or Overtighten the Screws.

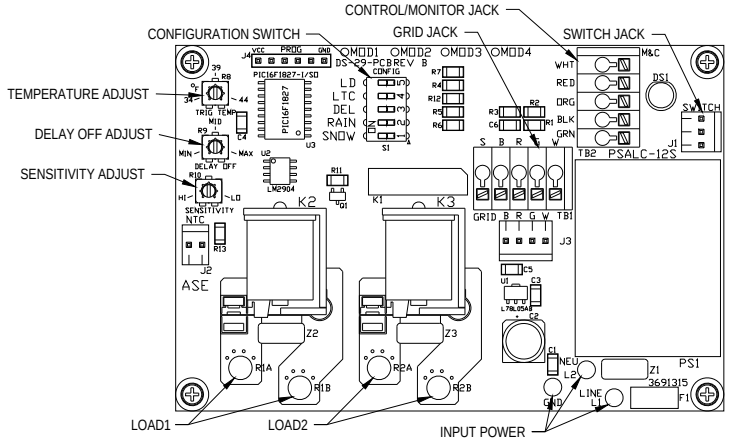

ALWAYS FOLLOW LOCAL AND NATIONAL ELECTRICAL CODES
Toujours Suivre Les Codes Électriques Locaux Et Nationaux

External Control/Monitor Operation

Pin	Color	Function
1	White	GND/Common
2	Red	Deice On Mon A
3	Orange	Deice On Mon B
4	Black	Manual On
5	Green	Standby/Reset

The DS-9C provides external control/monitor capability. Cable rated 300V up to 18 AWG can be connected to TB2 to access this feature. Connecting Black (4) to White (1) will activate the "Manual On" function. Connecting Green (5) to White (1) will activate the "Standby/Reset" function. See the "Manual Override Switch Function" for a description of these modes. The Red/Orange (2/3) leads are connected to an internal low power monitor relay. This relay, rated at 24 VAC/VDC @ 400 mA, 10W maximum, will close with the load relays and can be used to externally monitor activation of the sensor. This terminal block is also the connection point for connecting a CDP-2. Use only tinned, stranded, shielded cable for a reliable connection.

Power & Activation Indicator

A green lamp shines through a lens on the cover of the DS-9C to indicate operational status. If this lamp is OFF the DS-9C is not receiving power. If this lamp is steady ON the DS-9C is powered but not triggered. If this lamp is FLASHING the DS-9C is powered on and triggered, the main relays are closed, and attached equipment should be activated. Note that, even though snow or rain may have stopped, the DS-9C indicator will continue to flash during the Delay-Off drying cycle.

Fine Adjustment for Efficient Operation

The DS-9C is shipped with the TRIG TEMP and DELAY OFF adjustments in the center position, representing 39°F (3.9°C) and 60 minutes of Delay-Off time respectively. It is also set for highest SENSITIVITY. Depending on local conditions the user may find that fine adjustment of the controls may provide more satisfactory operation. If the sensor does not trigger during very wet snows the trigger temperature may need to be adjusted higher. Constant triggers from snow falling from trees or overhangs may be reduced by adjusting SENSITIVITY. The Delay-Off time can also be adjusted to provide clean melt-off without excessive running time. Fine adjustment can both save operating expense and provide more reliable operation. However, to keep reliability high, always make adjustments in small increments.

Moisture Grid Maintenance & Replacement

It is recommended that the DS-9C be powered down and the moisture grid wiped clean with clear water at least once every 4 months. Heavy deposits may be removed using a non-metallic scouring pad (Scotch-Brite™ or equivalent.) However, after a number of years, the corrosive elements left behind when water is evaporated out of the moisture grid will eventually damage the grid rings. The moisture grid can be easily replaced by ordering and installing a new MG-6 "Moisture Grid Assembly". Reference the "Moisture Sensor Mounting & Termination" section for information on replacing the moisture grid.

Preseason Snow Detection Testing

It is always a good idea to test the operation of the DS-9C prior to the winter season. Procure some clean water and, if the outdoor temperature is above the trigger point, a can of spray component cooler (Radio Shack Part #64-4321 or equivalent.) Clean the moisture grid following the procedure outlined above and allow it to dry. Apply power to the DS-9C, drip some of the water onto the moisture grid, then spray the temperature sensor protruding from the base of the enclosure with the component cooler. Once the temperature sensor has reached the trigger point with water still present on the grid the DS-9C will activate. The user should hear the internal control relays close and see the green lamp blink. Proper operation has been confirmed. Allow the grid to dry completely. To clear the Delay-Off timer place the override switch into "Standby/Reset", and then back to the "Automatic" position.

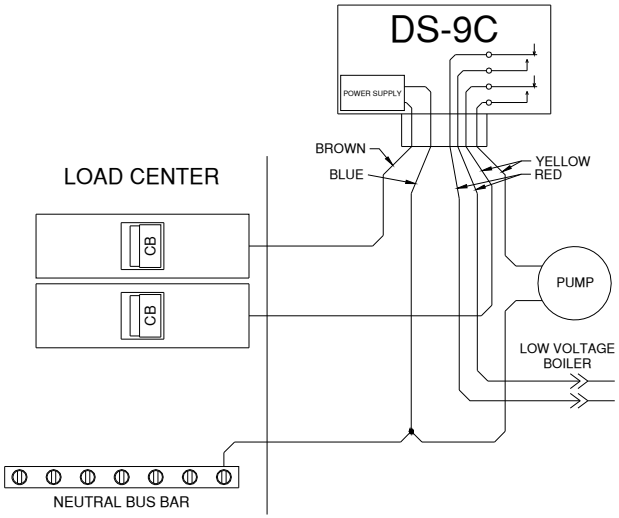

120VAC In, 120VAC Circulation Pump, 24VAC Boiler

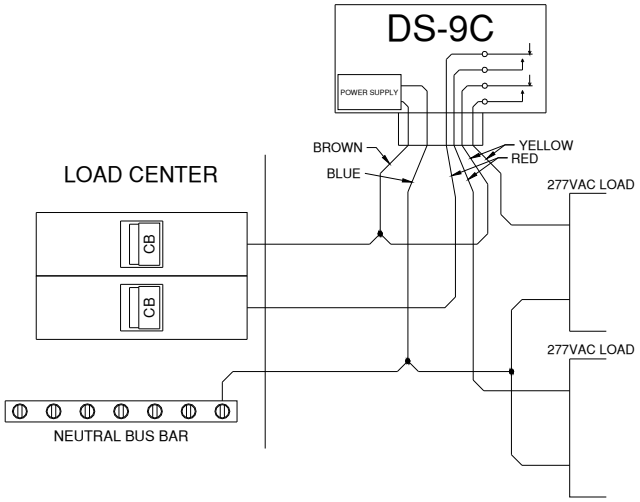

277VAC In, Dual 277VAC Load, Heat Cable or Similar (Also Applies to 120VAC)

These are just some of the possible wiring schemes that can be used to connect the DS-9C to your load for control. Remember, these are only suggestions. You should always consult a qualified electrician or inspector to assure conformance with applicable local and national electrical codes!

DO NOT USE THE DS-9C ENCLOSURE AS A JUNCTION BOX

Ne Pas Employer Une DS-9C As Une Boîte De Jonction

Moisture Sensor Mounting & Termination

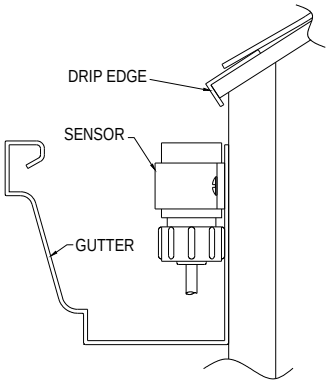

The DS-9C enclosure and moisture sensor must be mounted outdoors. The remote DS-9C moisture sensor may be mounted in a number of ways depending on the application. The unit operates at low voltage and can withstand immersion in water. For roof and gutter deicing applications the sensor head may be mounted in the gutter against the fascia board with a 1" "C"-style conduit clamp. Allow part of the sensor grid to be exposed to snowfall. This allows the sensor to initially trigger when snow starts falling and remain triggered as long as the roof/gutter heater continues to drip melted snow buildup from the roof edge when temperatures are below freezing. Detection can also be achieved by installing the sensor head near the top of the downspout using a 1" conduit hanger and mounting plate. As water is melted in the gutter it will run down the downspout, hitting and retriggering the sensor.

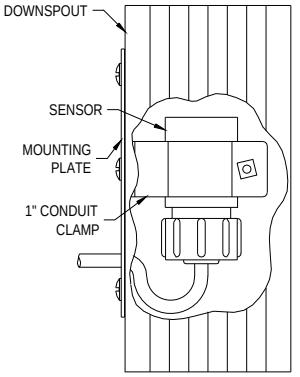

Ten feet of cable is pre-terminated to the sensor head. This cable may be shortened on the controller end as required. Do not add additional cable to the interface. Erratic operation may result. If the cable must be lengthened only use the EX-50 extension kit. Strip the outer insulation and shield from the cable and terminate each conductor following the color code printed on the circuit board. The bare drain wire should be installed into the terminal marked "S" for Shield. Two cable ties are also included. Wrap these ties securely around the cable in the enclosure to provide additional strain relief between the flexible enclosure gland and the free end of the cable.

Setting the Configuration Switches and Adjustments

The following paragraphs and table outline the operating modes for the DS-9C and explain the functions of the adjustments. Trigger temp (TT) is adjustable from 34°F-44°F (1°C-6°C) using the TRIG TEMP control. When ambient air temperature (AT) is below this setting precipitation is assumed to be snow. When above this setting, precipitation is assumed to be rain.

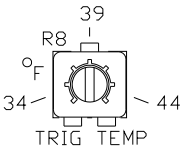

The DEL configuration switch activates the Delay-Off drying cycle timer on the DS-9C. The timer allows the DS-9C to continue to operate and dry the heated surface through evaporation once precipitation has stopped. The drying cycle reduces the chance of moisture left behind refreezing into ice. This timer is restarted by each sensor trigger. Therefore, the DS-9C will continue to operate as long as it is triggered, then for the Delay-Off period once the trigger clears. All "sensor" modes (DEL Off) provide a 2 minute Delay-Off time. When in "controller" mode (DEL On) the Long Delay (LD) configuration switch determines the time span of the drying cycle. The Delay-Off time can be adjusted from 30-90 minutes (LD Off) or 2-6 hours (LD On) using the DELAY OFF control.

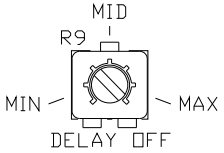

The Low Temperature Cutoff (LTC) option is typically used on snow melting systems with limited output capacity where melting cannot be maintained at very low temperature. If selected, the snow sensor will clear a trigger below 5°F (-15°C) even if snow is still falling. It will resume normal operation above 9°F (-13°C). However, the sensor will remember if it was triggered before the drop below 5°F or if snow was detected during the cold period. If so, the sensor will execute one Delay-Off cycle when the temperature rises above 9°F in order to melt any snow left behind during the cold period. This is referred to as RECOVER mode. Care should be exercised in using this mode as the potential exists for ice to be formed on the melting surface.

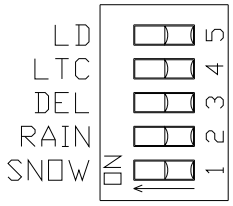

The DS-9C precipitation sensor is very sensitive and can detect a single snow flake or rain drop. However, if the DS-9C is mounted in an area susceptible to high winds, overhanging trees, or blowing ground snow, nuisance triggering may occur. While proper placement is the best remedy, the SENSITIVITY control can also be used to reduce nuisance triggering. An internal timer checks the precipitation sensor for moisture and compares cleared time with triggered time. The highest sensitivity setting (toward MORE) triggers on first detection. As the control is adjusted clockwise precipitation must be detected for a longer period to be considered valid. The lowest sensitivity setting (toward LESS) requires 120 seconds of detection before the unit triggers. If a trace amount of snow blows onto the grid from a drift or overhang it will likely be melted and evaporated in less than a minute. Similarly, a very light snowfall may also clear quickly from the grid. If these conditions should be ignored by the sensor the SENSITIVITY control can be adjusted as required. However, to prevent non-triggering during a true event, it is recommended that the user start at highest sensitivity (MORE), then adjust while monitoring operation over time.

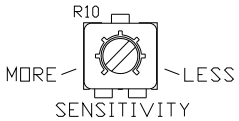

THE UNIT MUST BE IN STANDBY/RESET TO CHANGE CONFIGURATION SWITCHES

L'Appareil Doit Être En Mode STANDBY/RESET Pour Modifier Commutateurs De Configuration

Recommended Switch Settings by Function

Function	Trigger	LD Off	LD On	LTC	DEL	RAIN	SNOW
Snow sensor w\o LTC	TT>AT	2 Min	2 Min	OFF	OFF	OFF	ON
Snow sensor w\LTC	TT>AT>5°F	2 Min	2 Min	ON	OFF	OFF	ON
Snow controller w\o LTC	TT>AT	30-90 Min	2-6 Hr	OFF	ON	OFF	ON
Snow controller w\LTC	TT>AT>5°F	30-90 Min	2-6 Hr	ON	ON	OFF	ON
Precipitation sensor	Not Used	2 Min	2 Min	X	OFF	ON	ON
Precipitation controller	Not Used	30-90 Min	2-6 Hr	X	ON	ON	ON
Rain sensor	AT>TT	2 Min	2 Min	X	OFF	ON	OFF
Rain controller	AT>TT	30-90 Min	2-6 Hr	X	ON	ON	OFF
LT thermostat w\o LTC	TT>AT	2 Min	2 Min	OFF	X	OFF	OFF
LT thermostat w\LTC	TT>AT>5°F	2 Min	2 Min	ON	X	OFF	OFF

X = Do Not Care

Manual Override Switch Operation

An override switch mounted on the side is provided for testing and special operational requirements. Placing the switch in the AUTOMATIC position will allow the sensor to operate normally, activating the controlled equipment as needed. Placing the switch in MANUAL ON will close the load relay, activating the controlled equipment. The STANDBY/RESET position prohibits triggering of the unit, clears any active delay timer, and opens the load relay. In order to reduce excessive runtime for the heater the "Manual On" mode will remain in effect for up to 40 hours, then return to "Automatic" mode, even if the switch is still in the "Manual On" position. However, any trigger of the system will restart the 40 hour "Manual On" timer. You may put the DS-9C back into "Manual On" mode by switching to AUTOMATIC, then back to MANUAL ON. This will also restart the 40 hour timer.

If the override switch is placed in MANUAL ON for less than 2 seconds, then switched back to AUTOMATIC the controller will execute one Delay-Off cycle. This can be used to clear a frost, hail, or drifted snow buildup without the danger of leaving the system in a continuous "Manual On" condition. "Standby/Reset" can still be used to clear this Delay-Off cycle.

Typical Load Wiring

The main relays are dry contacts and do not supply power directly to your load

The Yellow and Red load leads connect to main relays 1 & 2 respectively. Both relays in the DS-9C activate together at all times. These relays act as normally open switches and are fully isolated from each other. Switching capacity of the DS-9C is 30A per circuit, 2 separate circuits. While not as convenient as directly supplying power for the load, dry contacts allow you to operate the DS-9C from one voltage while controlling loads of a different voltage or supplied by different circuits without adding external relays or contactors. The following diagrams show some possible wiring schemes for connecting the DS-9C to your load. For clarity the green safety GROUND leads are not shown.

DO NOT ATTEMPT TO INCREASE SWITCHING CAPACITY BY WIRING THE RELAYS IN PARALLEL

Ne Pas Tenter D'Augmenter La Capacité De Commutation Par Le Câblage Des Relais En Parallèle

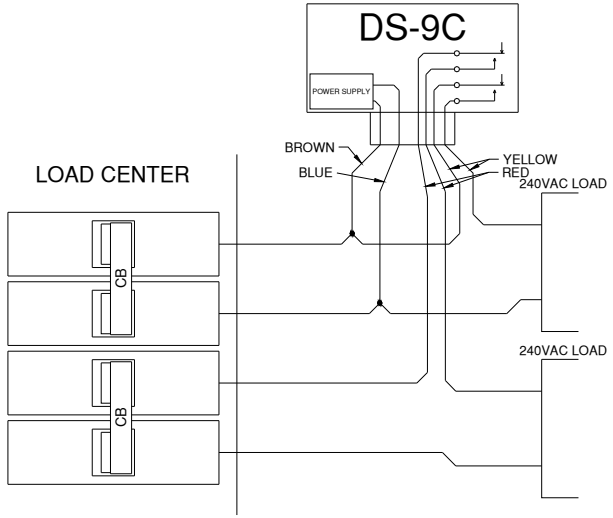

240VAC In, Dual 240VAC Load, Heat Cable or Similar