Self-Regulating Cable Design & Installation Guide

DE-ICERMAN



De-Ice Your World!

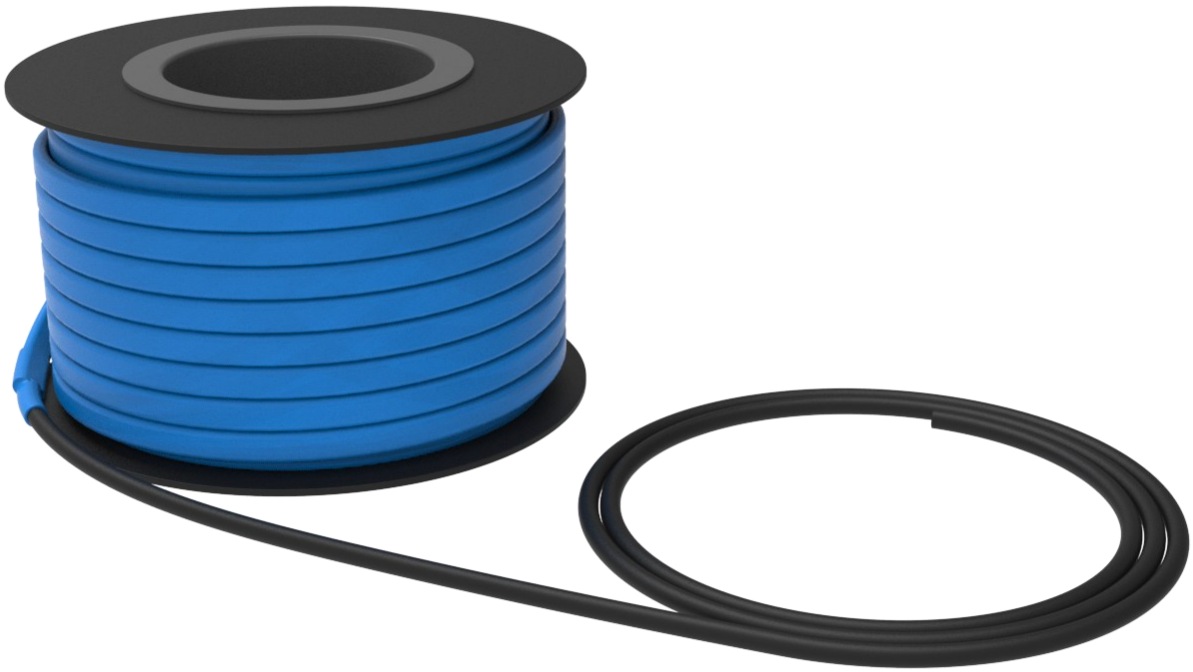

www.deicerman.com
P. 1-647-894-1347
E. info@deicerman.com

Contents

Description **3**

Pipe Freeze Protection Cable **4**

- **Cable Model & Length Selection** **4**
- **Cable Length Calculation** **5**
- **Maximum Cable length per Circuit Breaker** **5**
- **Cable Specification (Pipe)** **6**
- **Power Output Diagram (Pipe)** **6**

Cabe Installation (Pipe) **7**

- **Prior to Installation** **7**
- **Required Accessories** **8**
- **Required Tools** **8**
- **Installation** **9**
- **After Installation (Pipe)** **9**
- **Connecting the DSR-PFP cable to power** **10**
- **Installation Diagrams (Pipe)** **11**

Roof/Gutter De-Icing Cables **12**

- **Cable Length Selection** **12**
- **Maximum Cable length per Circuit Breaker** **13**
- **Cable Length Calculation** **13**
- **Cable Specification (Roof & Gutter)** **14**
- **Power Output Diagram (Roof & Gutter)** **14**

Cabe Installation (Roof/Gutter) **15**

- **Prior to Installation** **15**
- **Required Accessories** **16**
- **Required Tools** **16**
- **Installation** **17**
- **After Installation** **18**
- **Connecting the DSR-PFP cable to power** **19**

Warranty **20**

DE-ICERMAN

Design & Installation Guide

Self-Regulating Heat-Trace Cables

DESCRIPTION



De-Icerman self-regulating heat-trace cables are designed to automatically adjust its heat output in response to changes in ambient temperature along its length.
They consist of two parallel bus wires embedded in a semi-conductive polymer core whose electrical resistance varies with temperature decreasing in cold conditions to produce more heat and increasing in warmer conditions to reduce heat output.
This self-modulating behavior prevents overheating and allows the cable to be safely overlapped or cut to length in the field.
The conductive core is surrounded by insulation, an optional tinned-copper braid for grounding, and an outer protective jacket made from **Modified polyolefin** for enhanced moisture and mechanical resistance tailored for Pipe applications (DSR-PFP models) or **Thermoplastic elastomer** (TPE) containing a UV inhibitor for increased UV protection tailored for Roof & Gutter application (DSR-RGS models).





Pipe Freeze Protection Cable



Cable Model & Length Selection:

DSR-PFP model series are all specific to Pipe freeze protection. Use the tables below to lookup the cable model you need plus the length ratio based on temperature, pipe thickness, and pipe material.

TABLE A - METAL PIPE CABLE LENGTH MULTIPLIER

Min Ambient Temp. (°C)	Insulation Thickness (inch)	Pipe Size (inch)										
		1/2	3/4	1	1 1/4	1 1/2	2	2 1/2	3	4	6	8
		Cable Model : Length Multiplier										
-18	1/2	5:1	5:1	5:1	8:1	8:1	8:1	8:1	8:1	8:1	10:1	10:1
	1	5:1	5:1	5:1	5:1	5:1	5:1	5:1	8:1	8:1	8:1	8:1
	1 1/2	5:1	5:1	5:1	5:1	5:1	5:1	5:1	5:1	5:1	8:1	8:1
-29	1/2	5:1	8:1	8:1	8:1	8:1	8:1	8:1	8:1	10:1.1	10:1.8	N/A
	1	5:1	5:1	5:1	5:1	8:1	8:1	8:1	8:1	8:1	10:1	10:1.1
	1 1/2	5:1	5:1	5:1	5:1	5:1	5:1	8:1	8:1	8:1	8:1	8:1
	2	5:1	5:1	5:1	5:1	5:1	5:1	5:1	5:1	8:1	8:1	8:1
-40	1/2	8:1	8:1	8:1	8:1	8:1	8:1	8:1	10:1.2	10:1.8	N/A	N/A
	1	5:1	5:1	8:1	8:1	8:1	8:1	8:1	8:1	8:1	10:1.1	10:1.8
	1 1/2	5:1	5:1	5:1	5:1	8:1	8:1	8:1	8:1	8:1	8:1	10:1
	2	5:1	5:1	5:1	5:1	5:1	5:1	10:1	10	10:1	10:1	10:1

TABLE B - PLASTIC PIPES CABLE LENGTH MULTIPLIER

Min Ambient Temp. (°C)	Insulation Thickness (inch)	Pipe Size (inch)										
		1/2	3/4	1	1 1/4	1 1/2	2	2 1/2	3	4	6	8
		Cable Type : Length Multiplier										
-18	1/2	8:1	8:1	8:1	8:1	8:1	8:1	8:1	10:1	10/1.2	10/1.8	N/A
	1	5:1	8:1	8:1	8:1	8:1	8:1	8:1	8:1	8:1	10:1	10/1.2
	1 1/2	5:1	5:1	5:1	8:1	8:1	8:1	8:1	8:1	8:1	8:1	10:1
-29	1/2	8:1	8:1	8:1	8:1	10:1	10/1.1	10/1.2	10/1.8	N/A	N/A	N/A
	1	8:1	8:1	8:1	8:1	8:1	8:1	8:1	8:1	8/1.4	10/1.8	N/A
	1 1/2	5:1	8:1	8:1	8:1	8:1	8:1	8:1	8:1	8:1	8/1.3	10/1.8
	2	5:1	5:1	5:1	8:1	8:1	8:1	8:1	8:1	8:1	8:1	10/1.3
-40	1/2	8:1	8:1	10:1	10/1.1	10/1.2	10/1.8	10/1.8	N/A	N/A	N/A	N/A
	1	5:1	5:1	8:1	8:1	8:1	8:1	10:1	10/1.1	10/1.8	N/A	N/A
	1 1/2	5:1	5:1	5:1	5:1	8:1	8:1	8:1	8:1	10:1	10/1.8	10/1.8

where	Cable Model:	Length Multiplier:
	5: DSR-PFP-05-1 or DSR-PFP-05-2 8: DSR-PFP-08-1 or DSR-PFP-08-2 10: DSR-PFP-10-1 or DSR-PFP-10-2	This multiplier has a value of 1 or larger as shown in tables A & B above. Multiply it by the total length of your pipe system to get the total cable length required. Value of 1 represents a straight trace while greater than 1 requires you to do a spiral trace around the pipe.

Cable Length Calculation:

After looking up the cable model to use and the Length Multiplier, follow the formula below to calculate the total cable length you need for your project.

Total cable length formula:

Pipe length × length multiplier (Table A or B)
+ gate/globe valve consideration (4 × qty of valves × valve length (ft) × length ratio)
+ ball/butterfly valve consideration (2 × qty of valves × valve length (ft) × length ratio)
+ flange consideration (2 × qty of flanges × pipe diameter (ft) × length ratio)
+ pipe support consideration (2 × supports × pipe diameter (ft) × length ratio)
+ 1 ft for each power connection
+ 2 ft for each splice connection
+ 3 ft for each tee connection
+ 0.5 ft for each end seal

Sample Scenario (plastic pipe):

- Pipe size: 2 in.
- Lowest air temp.: -19°C (-2.2°F)
- Insulation thickness: ½ in.
- Pipe length: 70 ft
- Spiraling ratio: 1.1 (from Table B)
- Globe valves: 3 (each 0.5 ft long)
- Pipe supports: 12 supports for 1 in. pipe
- Power connection: 1
- Splice connection: 1
- End seals: 2

Cable length needed (in feet):

Pipe length × length multiplier:	70 × 1.1 = 77
Globe valves:	4 x 3 x 0.5 x 1.1 = 6.6
Pipe supports:	2 x 12 x 1/6 x 1.1 = 4.4
Power connection:	1 x 1 = 1
Splice connection:	2 x 1 = 2
End seals:	0.5 x 2 = 1
	Total = 92 ft.

Maximum Cable length per Circuit Breaker (Pipe)

Table C

Model (120 V)	Start-up Temperature	Maximum Cable Length (Ft.)			
		15A	20A	30A	40A
DSR-PFP-03-1	10°C (50°F)	295	295	295	295
	0°C (32°F)	259	279	295	295
	-20°C (-4°F)	183	236	295	295
DSR-PFP-05-1	10°C (50°F)	203	216	249	249
	0°C (32°F)	177	200	249	249
	-20°C (-4°F)	131	170	249	249
DSR-PFP-08-1	10°C (50°F)	131	170	190	190
	0°C (32°F)	118	154	196	190
	-20°C (-4°F)	88	118	183	190
DSR-PFP-10-1	10°C (50°F)	105	144	164	164
	0°C (32°F)	92	128	154	161
	-20°C (-4°F)	72	98	141	161

Table D

Model (240 V)	Start-up Temperature	Maximum Cable Length (Ft.)			
		15A	20A	30A	40A
DSR-PFP-03-2	10°C (50°F)	531	584	584	584
	0°C (32°F)	472	548	584	584
	-20°C (-4°F)	354	479	584	584
DSR-PFP-05-2	10°C (50°F)	413	430	489	489
	0°C (32°F)	361	400	489	489
	-20°C (-4°F)	259	341	489	489
DSR-PFP-08-2	10°C (50°F)	265	341	377	377
	0°C (32°F)	236	308	374	377
	-20°C (-4°F)	177	243	364	377
DSR-PFP-10-2	10°C (50°F)	197	252	324	324
	0°C (32°F)	180	230	311	321
	-20°C (-4°F)	147	190	288	318

Cable Specifications (Pipe):

Supply Voltage	110 - 120V or 208 - 240V
Bus Wires	16/17 AWG Tinned copper wires
Power Output	3, 5, 8, and 10 W/ft
Outer Jacket	Modified polyolefin
Minimum Bend Radius	1 inch (25 mm) @ -20°C (-4°F)
Max Exposure Temperature	85°C (185°F)
Min Installation Temperature	-20°C (-4°F)
Circuit Protection	30mA ground-fault protection required

Power Output Diagram (Pipe):

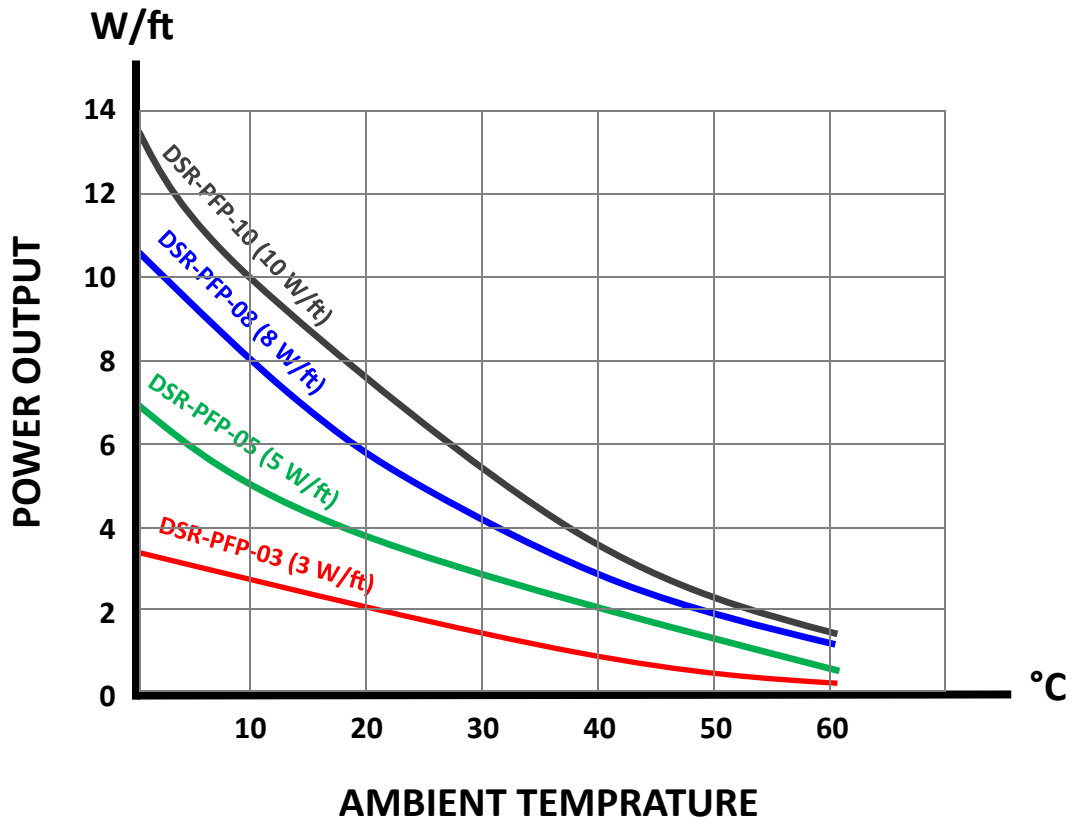

Cable Installation (Pipe)



Prior to Installation:

- For the warranties to be valid, you must comply with all the requirements outlined in these guidelines and you must follow all instructions precisely.
- Installation of Self-regulating cables is governed under National Electrical Code and Canadian Electrical Code. Only qualified individuals should perform this installation.
- A Ground Fault Circuit Interrupter (GFCI) is required for each heating cable branch circuit.
- The pipe system installation must be completed prior to start.
- DSR-PFP heating cables are not intended for use inside any pipes, for freeze protection of liquids other than water, or for use in classified hazardous locations.
- Install only in accessible locations; do not install behind walls or where the cable would be hidden. Do not run the heating cable through walls, ceilings, or floors.
- Install with a minimum of 1/2” fire-resistant, waterproof thermal insulation, as shown in table A & B above.
- Never use on any pipes that may exceed 150°F(65°C).
- Do not use an extension cord.
- Make sure you have selected the proper **Cable Type** and **Length** following the Cable Selection section above.
- Make sure the pipe system is dry and clear of anything that may damage the heating cable. Remove any sharp edges along the entire pipe system.
- Tape the ends of the cable temporarily if unsealed to protect it from moisture and dirt during the installation.
- Walk the system and plan the routing of the DSR-PFP heating for valves, flanges, etc. as shown in Figures 1 and 2 below.
- All thermal and design information provided here is based on a “standard” installation with heating cable fastened to an insulated pipe.

Required Tools:



Required Accessories:

Roof Clip Kit & Downspout hanger (DRCK)



Fixing Bracket
Stainless



Cable Ties
Nylon



Roof Clip



Power Connection Kit (DRPK)





Splice/Tee Connection Kit (DSTK)

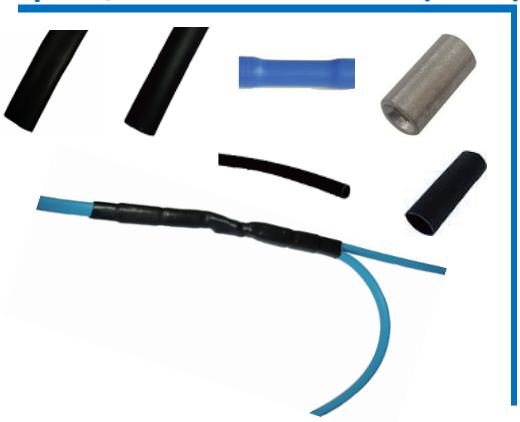

End Seal Kit (DEK)



Splice Connection Kit (DSK)



Power End Termination Kit (DPTK)





Fiberglass adhesive tape



Aluminum foil tape



Pipe insulation

Installation:

- If the Cable Selection suggests straight tracing for your project, using the fiberglass tape attach the cable on the lower part of the pipe (4 or 8 o'clock) every 1 foot using fiberglass application tape or nylon cable ties. Refer to **Figure 1** below for an illustration. Do not use vinyl electrical tape, duct tape, metal bands, or wire!
- For valves, simply spiral around the valve as much as the length suggested for that particular value (Cable Selection instruction above) allows.
- If the Cable Selection suggests spiral tracing:
  - ◊ for even distribution, spiral the cable once around the pipe every 8 - 10 feet, leaving equal slacks in between the spirals in a way that the full cable length is used. Make sure to allow additional lengths needed for things such as pipe Supports and Valves in those slacks.
  - ◊ Make sure to place the cable against the pipe in a flat position all the way for maximum effect.
  - ◊ Once comfortable with your slacks, tape where the spirals are attached to the pipe.
  - ◊ Then, grasp each slack in its center and start spiraling the cable around the pipe until the entire pipe length is covered and tape it every 2 feet. Refer to **Figure 2** below for an illustration.
- Apply the aluminum tape all the way along the pipe covering the entire cable.
- Install all end seals, splices, tees, and the power connection prior to plugging in your cable system.
- Perform a visual inspection along the entire pipe as well as all end seals, splices, tees, and the power connection.
- Using a megohmmeter, test each circuit to ensure cable connectivity is intact.
- Installing thermal insulation:
  - ◊ Prior to installing thermal insulation, make sure the heating cable is free of physical damage (from cuts, clamps, etc.) and thermal damage (from solder, overheating, etc.).
  - ◊ A reliable DSR-PFP system depends on properly installed and dry, weatherproofed thermal insulation. Follow the installation guide for your specific insulation type.
  - ◊ Ensure that at least 1/2" of preformed foam or equivalent thermal insulation is used and that all piping, including valves, joints, and wall penetrations, has been fully insulated.
  - ◊ Install the insulation on the piping as soon as possible to minimize the potential for mechanical damage after installation.
  - ◊ Attach "Electric Heating Cable" warning labels on the outer surface of the pipe insulation visible at suitable intervals to indicate the presence of DSR-PFP electric heating cable.

After Installation:

- Visually inspect all installed circuits ensuring that there are no physical damages to the lines and all connections are properly in place as expected.
- Test each circuit using a megohmmeter.
- Check all connections and junction boxes for moisture and in case of any water leakage remedy the leak and dry the effected areas.
- **TEST YOUR CIRCUITs:** Using a 500-Vdc megohmmeter (500 Vdc minimum), check the insulation resistance between both of the rectangular (power) prongs on the plug and the round (ground) prong after installing the heating cable. Minimum reading should be 1000 megohms. Record the original values for each circuit, and compare subsequent readings taken during regular maintenance schedules to the original values. If the readings fall below 1000 megohms, replace the DSR-PFP cable with a new unit. Do not attempt to repair the unit.
- Repeat the above test on regular intervals in time to ensure that your installation remains intact and safe. If the resistance falls below 1000 megohms inspect the entire line for any sign of damage or evidence of electrical shorting.

- **REPAIR:** In case of any damage discovery, do not attempt to fix the damage. Simply replace a section of the cable using the Splice/Tee Connection kits (DSK, DSTK). If you cannot find the physical damage, simply replace that entire line.
- **WARNING:** Do not take a chance with a circuit that fail the test as electrical shortage can cause electrical shock and fire.

Connecting the DSR-PFP cable to power:

- For 120 Volt cables, the heating cable can simply be plugged Into a ground fault protected electrical receptacle. If you are not working with a Pre-Assembled package, you will need to purchase a Power/Splice Connection Kit (DPPK) for each power connection separately.
- For 240 Volt cables, the cable is designed to be directly connected into an appropriate electrical outlet box supplied by ground fault protected circuit. Using the three wire connectors included in the kit, connect the black and white cold leads to both phase wires and the green cold lead to ground. Provide suitable UL Listed and CSA Certified junction box and outlet bushing and fitting.

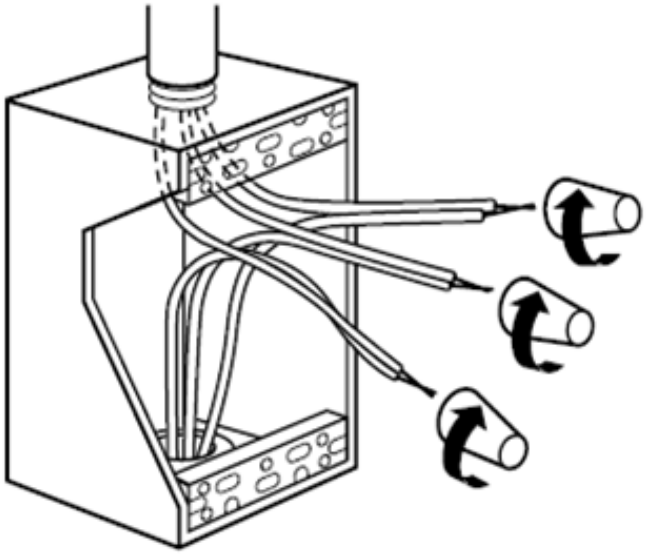

Installation Diagrams (Pipe):

Figure 1: Streight-Traced Installation

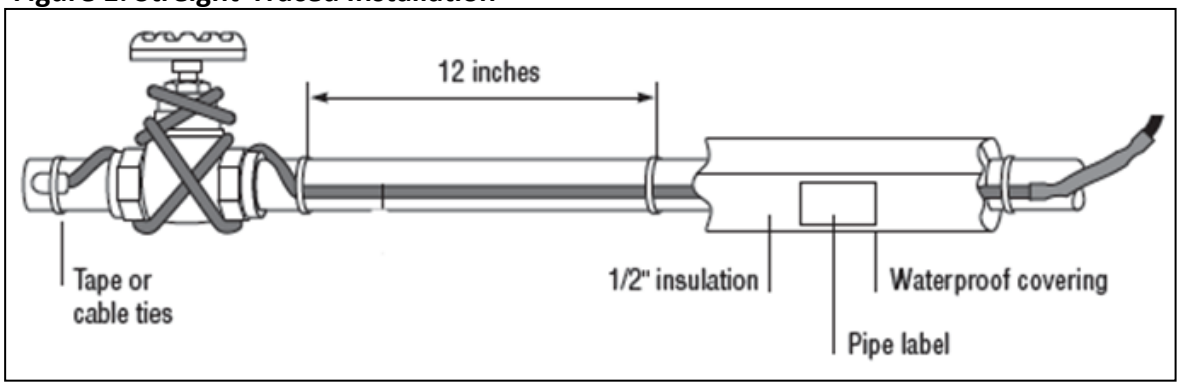

Figure 2: Spiral-Traced Installation

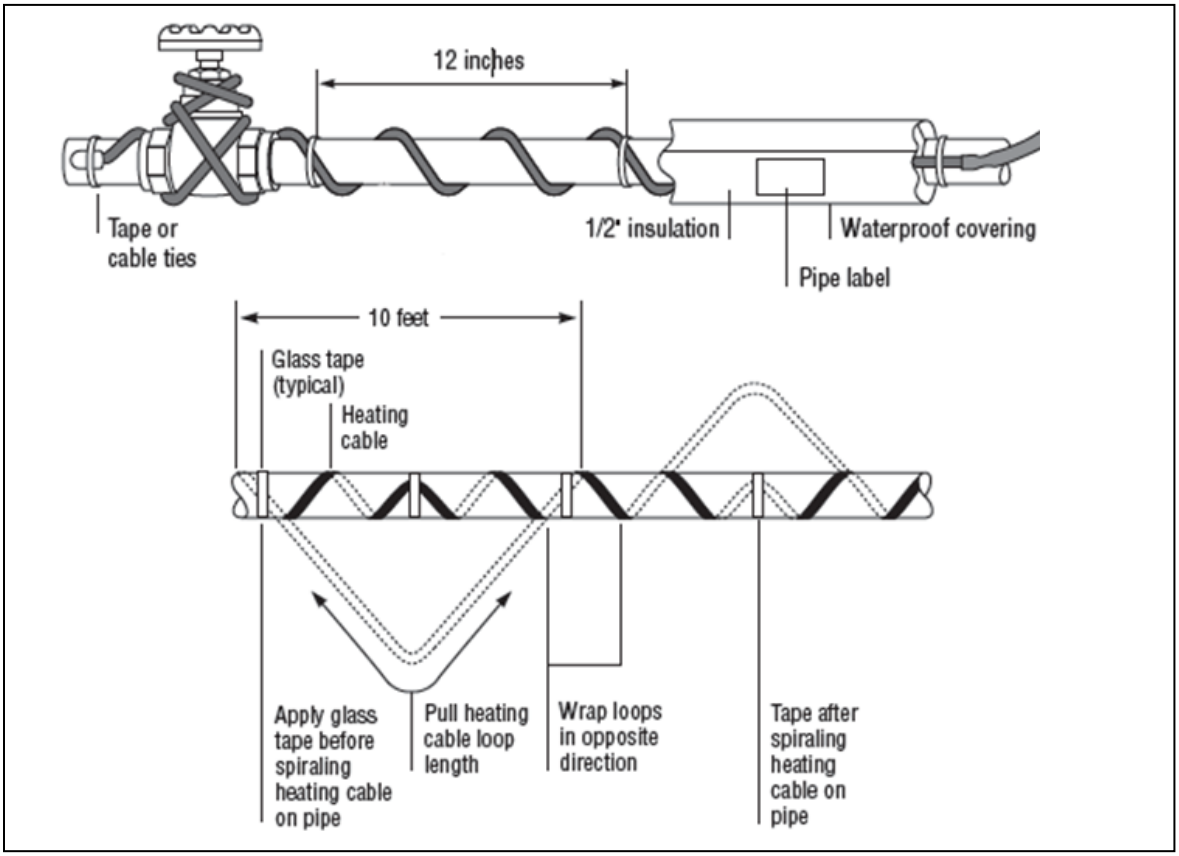

Roof/Gutter De-Icing Cable



Cable Length Selection:

DSR-RGS model series are all specific to Roof & Gutter De-Icing. The length of the cable depends on how long the roof edges are. A multiplier is used to calculate the total length needed. Look up the multiplier in this table for your roof type:

Overhang width	"zigzag" width (inch)		"zigzag" height (inch)		multiplier	
	Shingle	Metal	Shingle	Metal	Shingle	Metal
No Overhang	18	24	18	18	2	2.5
12	18	24	24	24	2.8	2.8
24	18	24	30	36	3.8	3.6
36	18	24	42	48	4.8	4.3

After looking up the cable Length Multiplier above, follow the formula below to calculate the total cable length you need for your project.

Formula		
Roof Edge:	Roof Length x multiplier	= A
Roof Edge:	Roof Length x multiplier	= A
Roof Extension:	Roof Length x 0.5	= B
Dormers:	Quantity x perimeter	= C
Valleys:	Quantity x 2/3 up x 2	= D
Roof Gutters:	Roof Length	= E
Wide Gutters * (for a second cable):	Roof Length	= F
Downspouts:	Quantity x Length x 2 (or 1 if end of circuit)	= G
Connections **:	Total conn. considerations	= H
	Total	= A + B + C + D + E + F + G + H

* Wide gutters are 5 inches wide or wider & use 2 runs of cable.

** Connection considerations:
- ⇒ End Seal: 1/2 ft.
- ⇒ Power Connection: 1 ft.
- ⇒ Splice Connection: 2 ft.
- ⇒ Tee Connection: 3 ft.

Maximum Cable length per Circuit Breaker

Model	Voltage	Start-up Temperature	Maximum Cable Length (Ft.)			
			15A	20A	30A	40A
DSR-RGS-12-1	120	10°C (50°F)	95	128	190	190
DSR-RGS-12-1	120	0°C (32°F)	92	118	174	190
DSR-RGS-12-1	120	-20°C (-4°F)	75	95	148	190
DSR-RGS-12-2	208	10°C (50°F)	180	236	360	360
DSR-RGS-12-2	208	0°C (32°F)	171	223	338	360
DSR-RGS-12-2	208	-20°C (-4°F)	138	184	275	360
DSR-RGS-12-2	240	10°C (50°F)	190	252	380	380
DSR-RGS-12-2	240	0°C (32°F)	180	236	350	380
DSR-RGS-12-2	240	-20°C (-4°F)	148	193	288	380

Cable Length Calculation:

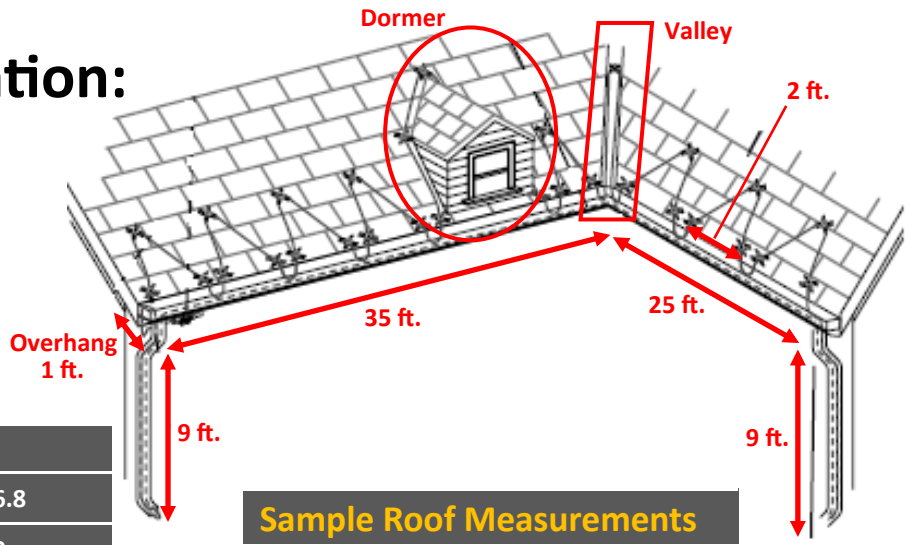

Example:

Calculation		
Roof Coverage:	60 x 2.8	= 16.8
Roof Extension:	60 x 0.5	= 30
Dormers:	1 x 28	= 28
Valleys:	1 x 2/3 x 10 x 2	= 13.33
Gutter:	60	= 60
Wide Gutters (for a second cable):	60	= 60
Downspouts:	2 x 9	= 18
Power Connection:	1 x 1	= 1
	Total Cable Length	= 227.13 Sf.

Sample Roof Measurements	
Roof type:	Shingle
Roof Edge:	60 ft.
Dormer perimeter:	28 ft.
Valleys:	1 (10 ft.)
Downspouts:	2 (9 ft. each)
Roof Overhang:	1 ft.
Number of Circuits:	1

IMPORTANT: Avoid exceeding the maximum length allowed for each circuit. Please consult tables C & D (above) for the maximum length allowed per circuit. For longer coverage, either use additional circuits or select an appropriate cable model with long coverage.

Cable Specifications (Roof & Gutter):

Supply Voltage	110 - 120V or 208 - 240V
Bus Wires	16/17 AWG Tinned copper wires
Normal Power Output	In Ice/Snow @ 0°C (32°F): 12 W/ft || In Air @ 0°C (32°F): 10 W/ft
Outer Jacket	Thermoplastic Elastomer
Minimum Bend Radius	1 inch (25 mm) @ -20°C (-4°F)
Max Exposure Temperature	85°C (185°F)
Min Installation Temperature	-20°C (-4°F)

Power Output Diagram (Roof & Gutter):

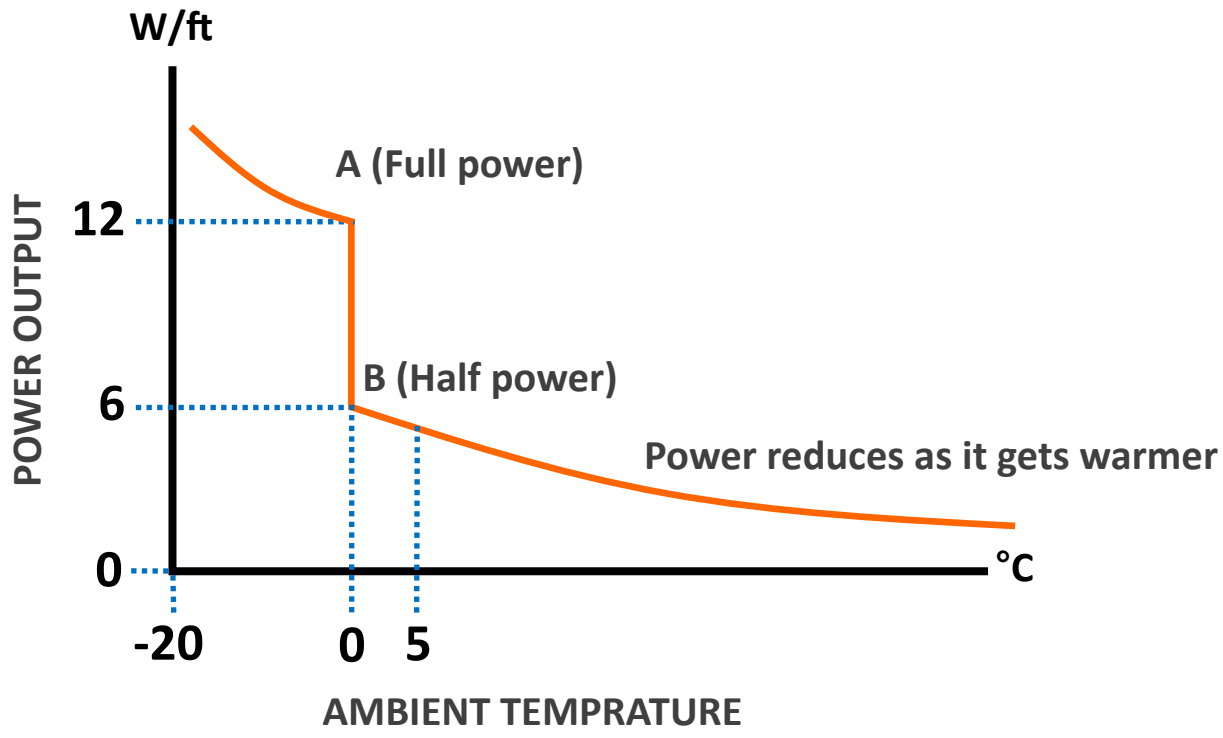

Cable Installation (Roof/Gutter)



General Requirements:.

- DSR-RGS is designed to melt falling snow, not accumulated snow away from the cable.
- DSR-RGS heating cable will not keep snow or ice from falling off the roof. Snow fences or snow guards should be used to eliminate snow movement. For the names of manufacturers of snow guards or snow fences, contact De-Icerman team.
- DSR-RGS heating cables may be used on:
  - ◊ Roofs made from all types of standard roofing materials, including shake, shingle, rubber, tar, wood, metal, and plastic.
  - ◊ Gutters made from standard materials, including metal and plastic.
  - ◊ Downspouts made from standard materials, including metal and plastic.
- Do not use an extension cord.
- Do not install the heating cable underneath any roof covering for roof and gutter de-icing.
- Install only in accessible locations; do not install behind walls or where the cable would be hidden.
- Do not run the heating cable through walls, ceilings, or floors.
- Connect only to ground-fault protected outlets that have been installed in accordance with all prevailing national and local codes and standards and are protected from rain and other water.

Prior to Installation:.

- For the warranties to be valid, you must follow all instructions in this document precisely.
- Installation of Self-regulating cables is governed under National Electrical Code and Canadian Electrical Code.
- A Ground Fault Circuit Interrupter (GFCI) is required for each heating cable branch circuit.
- Only qualified individuals should perform this installation.
- Make sure you have selected the proper **Cable Type** and **Length** following the Cable Selection section above.
- Tape the ends of the cable temporarily if unsealed to protect it from moisture and dirt during the installation.
- Plan your Cable route on the roof, in gutters, downspouts, sheltered power source, and any other features on the roof you like covered.
- Ensure there are no combustible material in the path or close to your planned routes.
- Remember that the minimum bend radius for Self-Regulating cables are 0.5 inch.
- Make sure the gutters and downspouts are clear of any leaves, debris, and any sharp edges that may damage the cable during or after the installation.
- If downspout is in the middle of the run, loop the DSR-RGS down and back up. Double the length of the downspout for determining the length of DSR-RGS to install.
- For valleys, run the heating cable two thirds of the way up and down the valley.
- For gutters 5-6 inches wide use 2 runs of heating cable.
- For gutters wider than 6 inches contact De-Icerman @ +1 (647) 894-1347.

Required Accessories:

Roof Clip Kit & Downspout hanger (DRCK)



Fixing Bracket
Stainless



Cable Ties
Nylon



Roof Clip



Power Connection Kit (DPRK)



Splice/Tee Connection Kit (DSTK)

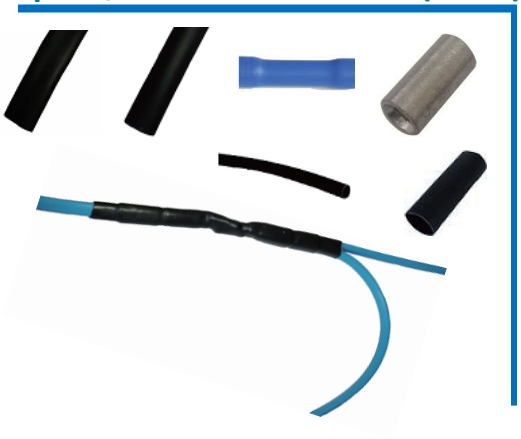

End Seal Kit (DEK)



Splice Connection Kit (DSK)



Power End Termination Kit (DPTK)



Required Tools:



Installation:

- Mark the spots for the top roof clips (equal distances from the roof edge and 2 feet apart) and attach them.
- Ensure that the top roof clips extend passed the building wall on the roof.
- Use adhesive, nails, or screws as required but ensure that all penetrations are sealed to avoid water penetration into the roof.
- The wire installation from the circuit breaker to the cable power outlet must be waterproof and professionally installed.
- While running the cable ensure that there are no sharp edges along the line while you are pulling and pushing the cable over the roof edge, inside the gutters, and down the downspouts.
- Do not install in temperatures lower than –18°C.
- Run the gutter cables as per your routing plan:
  - ⇒ Run the cable into the downspouts, 2 runs (in and out) if in the middle of circuit, 1 run if at the end.
  - ⇒ You can also use Splice/Tee connection (Accessory Kit: DSTK) to a new branch down the downspout.
  - ⇒ Make sure to use fixing brackets (Accessory Kit: DRCK) for running the cable over the sharp edges and down the downspout.
  - ⇒ Use roof clips to secure the entrance and exits of the cable into and out of the gutter.
  - ⇒ It is better to also secure the cable to the bottom of the gutter using the clips as well but not necessary.
- Run the cable in a Zigzag form over the clips as shown in the picture below along the edge of the roof and in the downspout as per your routing plan.
- Leave enough slack at he bottom of each loop for the cable to reach the gutter bed touching the gutter cable running at the bottom of the gutter as shown here.

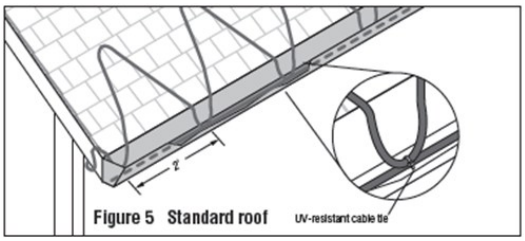

Figure 5 Standard roof

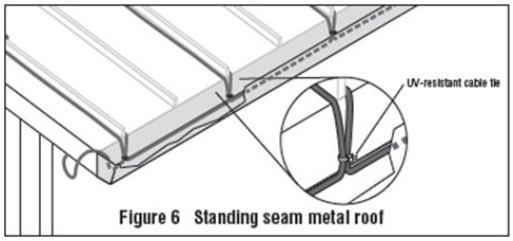

Figure 6 Standing seam metal roof

- Tie the bottom of the loops to the gutter cable using the nylon cable ties. Connecting all cables ensures an open channel for a constant flow of water streaming off the roof, into the gutters, and down the downspouts unblocked by ice and snow.
- Permanent attachment of the cable to the gutter bottom is not necessary. Loop the heating cable in downspouts. Do not leave the end of the DSR-RGS in air at the end of the downspout as shown in Figure 10 below.
- Once you are satisfied with your circuits, install the end seal (Accessory Kit: DEK) and power connection (Accessory Kit: DRPK).
- Trace two-thirds of the way up each valley with a double run of heating cable as shown in Figure 8 below.
- Use DRCK roof clips to route heating cable into and out of the gutter in such a way as to prevent abrasion to the cable. Protect all cable that protrudes past the lower opening of the downspout. Roof clips may be attached to a shake or shingle roof with nails or screws as shown in Figure 7. Roof clips may be attached to a metal roof using screw, nail or adhesive as shown in Figure 9. Reseal the nail or screw holes if necessary, before installing heating cable in the clips.

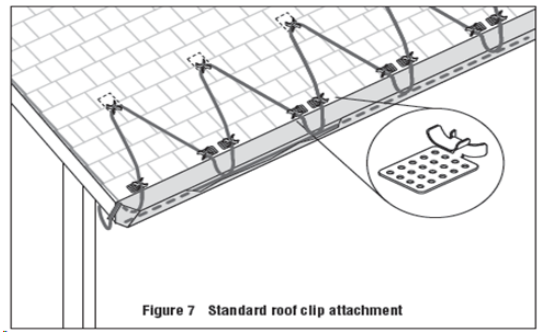

Figure 7 Standard roof clip attachment

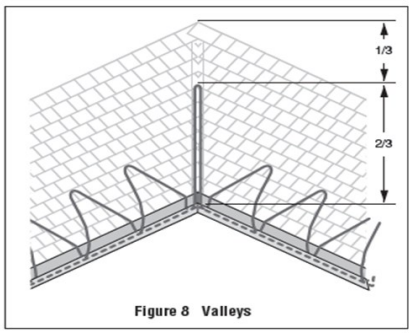

Figure 8 Valleys

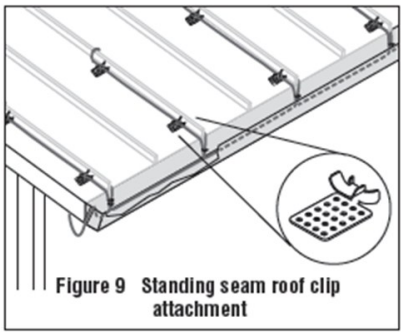

Figure 9 Standing seam roof clip attachment

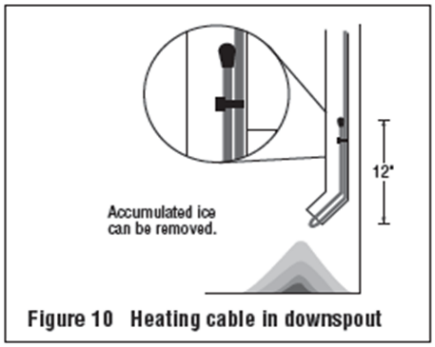

Figure 10 Heating cable in downspout

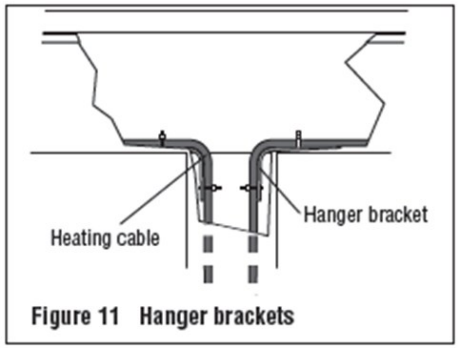

Figure 11 Hanger brackets

- A barrier (snow fence) can be placed on the roof above the heating cable. This prevents damage to the cable and keeps the installation from coming loose due to ice slides. The heating cable can be attached to the barrier with UV-resistant cable ties, instead of using roof clips, if desired. Do not use wire or other materials because they may damage the heating cable.
- Use only standard/waterproof junction box and make sure that the entry to the box is underneath the box.
- **Mark the installation.** One label (indicating the presence of electric de-icing and snow-melting equipment on the premises) must be posted at the electrical outlet cover. The other label must be posted at the fuse or circuit breaker panel. The labels must be clearly visible.

After Installation:

- Visually inspect all installed circuits ensuring that there are no physical damages to the lines and all connections are properly in place as expected.
- Test each circuit using a megohmmeter.
- Check all connections and junction boxes for moisture and in case of any water leakage remedy the leak and dry the effected areas.
- **TEST YOUR CIRCUITs:** Using a 500-Vdc megohmmeter (500 Vdc minimum), check the insulation resistance between both of the rectangular (power) prongs on the plug and the round (ground) prong after installing the heating cable. Minimum reading should be 1000 megohms. Record the original values for each circuit, and compare subsequent readings taken during regular maintenance schedules to the original values. If the readings fall below 1000 megohms, replace the DSR-PFP cable with a new unit. Do not attempt to repair the unit.
- Repeat the above test on regular intervals in time to ensure that your installation remains intact and safe. If the resistance falls below 1000 megohms inspect the entire line for any sign of damage or evidence of electrical shorting.

- **REPAIR:** In case of any damage discovery, do not attempt to fix the damage. Simply replace a section of the cable using the Splice/Tee Connection kits (DSK, DSTK). If you cannot find the physical damage, simply replace that entire line.
- **WARNING:** Do not take a chance with a circuit that fail the test as electrical shortage can cause electrical shock and fire.

Connecting the DSR-PFP cable to power:

- For 120 Volt cables, the heating cable can simply be plugged Into a ground fault protected electrical receptacle. If you are not working with a Pre-Assembled package, you will need to purchase a Power Connection Kit (**DPRK**) for each power connection separately.
- For 240 Volt cables, the cable is designed to be directly connected into an appropriate electrical outlet box supplied by ground fault protected circuit. Using the three wire connectors included in the kit, connect the black and white cold leads to both phase wires and the green cold lead to ground. Provide suitable UL Listed and CSA Certified junction box and outlet bushing and fitting.

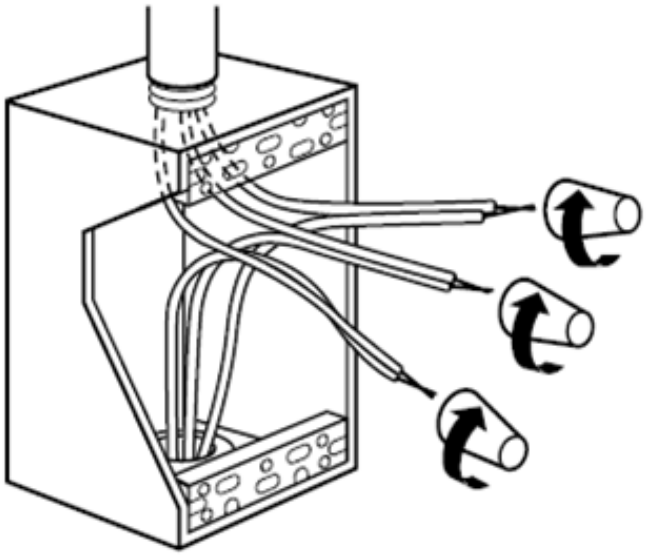

WARRANTY





2 YEARS from the purchase date

The warranty is valid only if all the following conditions are met:

- The self-regulating heating cable is installed and tested according to the installation instructions published by De-Icerman.
- Damages caused during the installation of the cable are not covered under the warranty.
- De-Icerman reserves the right to inspect the installation site(s) to determine whether this limited warranty applies within 30 days of the discovery of the defect(s).
- No cables should be returned without prior authorization from De-Icerman.
- Customers are responsible for disassembling and packaging the returns as well as all shipment costs.
- Test results and the required information requested is sent in writing to De-Icerman within 30 days of the completed self-regulating heating cable installation.
- The self-regulating heating cable is returned to De-Icerman with proof of purchase and with a written explanation of the alleged defect(s).

THIS LIMITED WARRANTY IS EXCLUSIVE. THERE ARE NO WARRANTIES OF MERCHANTABILITY, AND THERE ARE NO WARRANTIES THAT EXTEND BEYOND THE DESCRIPTION ON THE FACE HEREOF.

www.deicerman.com
P. 1-647-894-1347
E. info@deicerman.com