DE-ICERMAN
www.deicerman.com
sales@deicerman.com

DSR-RGS

Pre-assembled electric heating cables for roof & gutter de-icing

Installation Instructions

DESCRIPTION

DSR-RGS preassembled self-regulating heating cables are designed for residential and light commercial roof & gutter de-icing applications. DSR-RGS heating cables each comes assembled with a 6-ft power lead.

Model information

DSR-RGS-12-Y, where
Y: 1 (120V), 2 (240V)

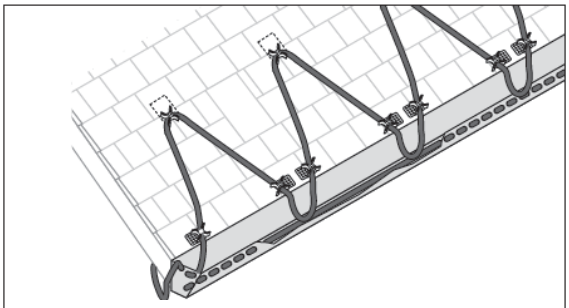

Roof & Gutter De-icing standard roof

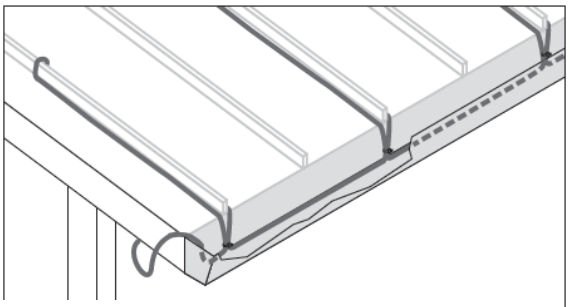

Roof & Gutter De-icing standing seam metal roof

KIT CONTENTS

1 DSR-RGS preassembled electric heating cable
2 Roof & gutter labels and Electric Traced Labels
3 Wire Connection nuts (for 240V)

ADDITIONAL ITEMS REQUIRED BUT NOT SUPPLIED FOR ROOF & GUTTER APPLICATIONS

Ground-fault protected outlet (GFCI, Class A)

DE-ICERMAN DRCK Connect kits

For DSR-RGS-12-2 (240V):

UL Listed or CSA Certified junction box
UL Listed or CSA Certified outlet bushing and fitting

APPROVALS

C SP US

⚠ WARNING:

Fire and Shock Hazard: This product is an electrical device that must be installed correctly to ensure proper operation and to prevent shock or fire. Read these important warnings and carefully follow all the installation instructions.

- To minimize the danger of fire from sustained electrical arcing if the heating cable is damaged or improperly installed, and to comply with the requirements of De-Icerman agency certifications, and national electrical codes, ground-fault equipment protection must be used on each heating cable branch circuit. Arcing may not be stopped by conventional circuit protection.
- Keep ends of heating devices and kit components dry before and during installation.
- The conductive layer of this device shall not be utilized as a grounding conductor, but must be bonded to ground
- The presence of the heating devices shall be made evident by the posting of caution signs or markings where clearly visible.
- Do not damage the heating cable and power cord or plug. Remove any damaged cables from service immediately.
- Do not install the heating cable underneath any roof covering for roof and gutter de-icing.
- Leave these installation instructions with the user for future reference.
- Ensure that the roofing material is suitable for the heating cable which has a maximum sheath temperature of 85C.
- **Installation in accordance with the Canadian Electrical Code Part I (CEC Part I) in Canada or the National Electrical Code (NEC) in the U.S.A.**

Note: Route and secure the heating cable to avoid possible mechanical damage, such as from ladders, etc.

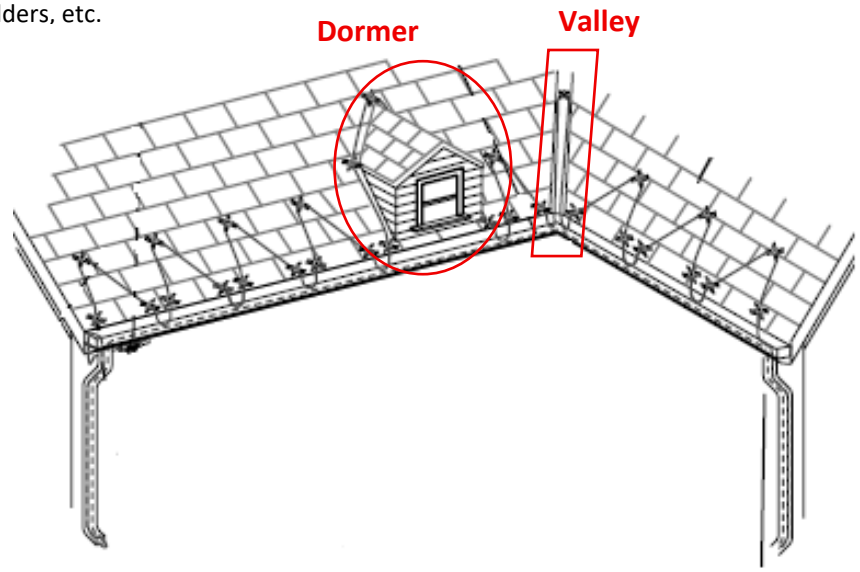

General requirements for roof & gutter de-icing:

- DSR-RGS is designed to melt falling snow, not accumulated snow away from the cable.
- DSR-RGS heating cable will not keep snow or ice from falling off the roof. Snow fences or snow guards should be used to eliminate snow movement. For the names of manufacturers of snow guards or snow fences, contact De-Icerman team.
- DSR-RGS heating cables may be used on:
  - Roofs made from all types of standard roofing materials, including shake, shingle, rubber, tar, wood, metal, and plastic.
  - Gutters made from standard materials, including metal and plastic.
  - Downspouts made from standard materials, including metal and plastic.
- Do not use an extension cord.
- Do not install the heating cable underneath any roof covering for roof and gutter de-icing.
- Install only in accessible locations; do not install behind walls or where the cable would be hidden.
- Do not run the heating cable through walls, ceilings, or floors.
- Connect only to ground-fault protected outlets that have been installed in accordance with all prevailing national and local codes and standards and are protected from rain and other water.
- Installation Type B - Outdoor exposed areas

DSR-RGS heating cable selection for roof & gutter de-icing

Calculate the heating cable length: Find the number of feet of heating cable needed per edge in Table 3. Then, calculate the amount of total cable length you need using the following formula:

Connection considerations: End Seal (1/2 ft.), Power Conn. (1 ft.), Splice Conn. (2 ft.), Tee Conn. (3 ft.)

Unit：FT	**Example: (shingle roof)**	**Heating cable required**
• Roof edge length x Length of cable per foot of roof edge	Eave overhang: 1 ft / 12 in	**A** Roof edge: 15 ft x 2.8 = 42.0 ft
• Roof extension: Roof edge x 0.5*	Roof edge: 15 ft	**B** Roof extension: 15 ft x 0.5 = 7.5 ft
• Dormer (perimeter of all dormers)	Dormer: 20 ft	**C** Dormers: 20 ft
• Valley (Length x 2/3 x 2)	Valley: 12 ft	**D** Valleys: 12 x 2/3 x 2 = 16 ft
• Roof gutter: Total gutter length	Roof gutter: 15 ft	**E** Roof gutters: 15 ft = 15.0 ft
• Wide gutter:		**F** Wide gutters: N/A
• Downspout: Total downspout length	Downspout: 15 ft	**G** Downspout: 15 ft + 1 ft = 16.0 ft
• +1 [double if looping]		
= Total heating cable length (ft)		

Table 3. Typical spacing and layout measurements

Important:

For the DSR-RGS warranty to be valid, you must comply with all the requirements outlined in these guidelines

All thermal and design information provided here is based upon a "standard" installation with heating cable on the roof. For any other application or method of installation, contact De-Icerman.

Note: De-Icerman recommends the use of gutters and downspouts to provide a continuous path for melted water.

- If downspout is in the middle of the run, loop the DSR-RGS down and back up. Double the length of the downspout for determining the length of DSR-RGS to install.
- For valleys, run the heating cable two thirds of the way up and down the valley.
- For gutters 5-6 inches wide use 2 runs of heating cable.
- For gutters wider than 6 inches contact De-Icerman. Solutions, +1 (647) 549-1347

Heating cable installation

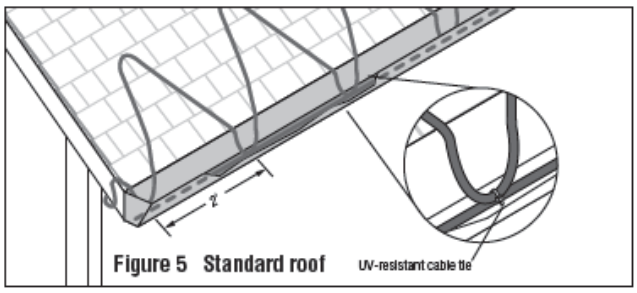

Figure 5 Standard roof

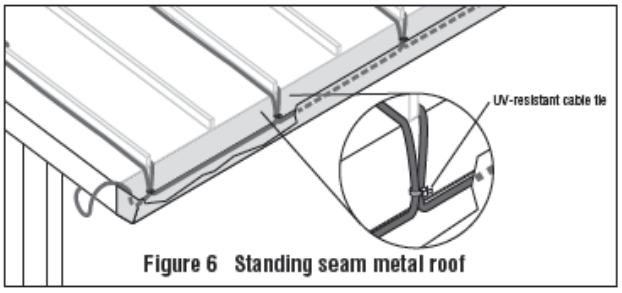

Figure 6 Standing seam metal roof

1. Prepare for installation.

- Store the heating cable in a clean, dry place.
- Use only the following De-Icerman accessories to satisfy code and agency requirements: *DRCK*
- Make certain gutters and downspouts are free of leaves and other debris.
- Carefully plan the routing of the heating cable for roof and gutter de-icing.

2. Position and attach the heating cable on roofs.

- Loop the heating cable on the overhang area of the roof. This is the part that extends past the building wall. Extend the bottom of each heating cable loop over the roof edge and, using a UV-resistant cable tie, connect the bottom of each loop to the cable running in the gutter to ensure a drainage channel off the roof and into the gutter and downspout. The cable running in the gutter should remain against the bottom of the gutter as shown in Figures 5 and 6.
- Extend the top of each heating cable loop beyond where the wall joins the roof.
- Trace two-thirds of the way up each valley with a double run of heating cable as shown in Figure 8.
- Use DRCK roof clips to route heating cable into and out of the gutter in such a way as to prevent abrasion to the cable. Protect all cable that protrudes past the lower opening of the downspout.
- Roof clips may be attached to a shake or shingle roof with nails or screws as shown in Figure 7. Roof clips may be attached to a metal roof using screw, nail or adhesive as shown in Figure 9.

Table 4. Tracing heights for different roof styles

Shake and Shingle Roof

Roof of overhang (in)	Tracing width (in)	Tracing heights (in)	Feet of DSR-RGS per foot roof edge
None	24	18	2
12	24	24	2.8
24	24	30	3.8
36	24	42	4.8

Standing Seam Metal Roof **

Roof of overhang (in)	Tracing width (in)	Tracing heights (in)	Feet of DSR-RGS per foot roof edge
None*	18	18	2.5
12	18	24	2.8
24	18	36	3.6
36	18	48	4.3
None*	24	18	2.0
12	24	24	2.4
24	24	36	2.9
36	24	48	3.6

** Gutter required*

*** No additional heating cable is required for gutters when tracing standing seam metal roofs*

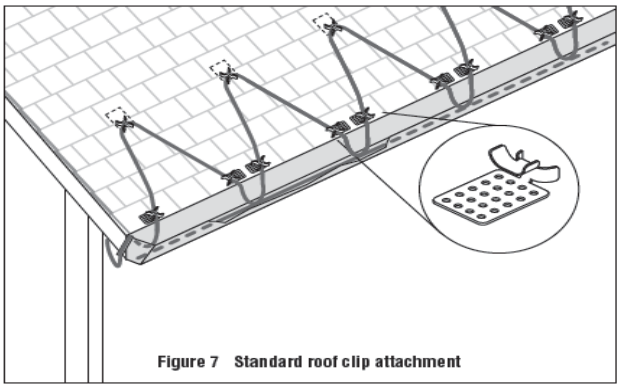
Figure 7 Standard roof clip attachment

(See DEICERMAN Self Regulating Cable Design Guide for more details.) Reseal the nail or screw holes if necessary, before installing heating cable in the clips.

- A barrier (snow fence) can be placed on the roof above the heating cable. This prevents damage to the cable and keeps the installation from coming loose due to ice slides. The heating cable can be attached to the barrier with UV-resistant cable ties, instead of using roof clips, if desired. Do not use wire or other materials because they may damage the heating cable.

In gutters and downspouts

- Run heating cable along gutters and into downspouts, ending below the freezing level. Permanent attachment of the cable to the gutter bottom is not necessary. Loop the heating cable in downspouts. Do not leave the end of the DSR-RGS in air at the end of the downspout as shown in Figure 10.
- Use DRCK Hanger Brackets at the gutter/downspout transition to protect the heating cable from fraying and from damage from sharp edges and to provide strain relief as shown in Figure 11. Refer to the DRCK kit instructions for installation details.
- Route and secure cable to avoid possible mechanical damage, such as from ladders, etc.

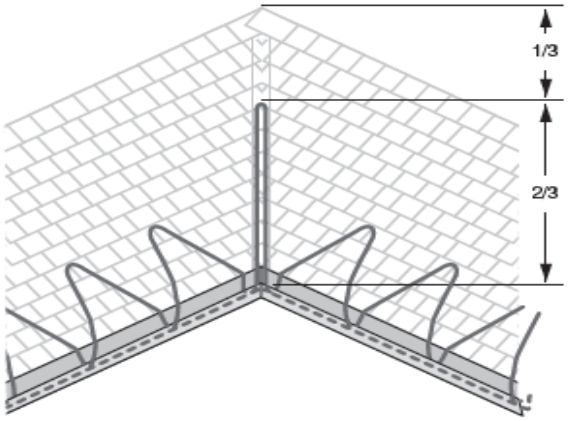

Figure 8 Valleys

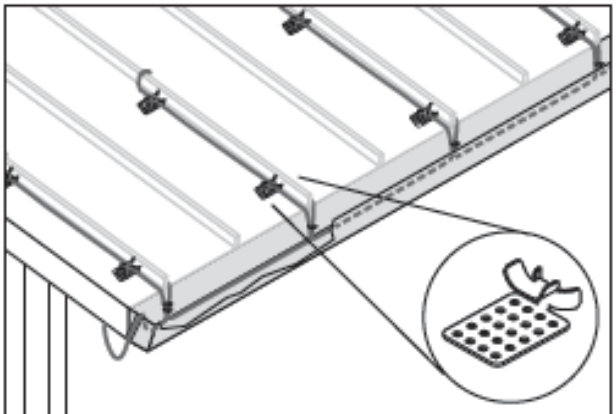
Figure 9 Standing seam roof clip attachment

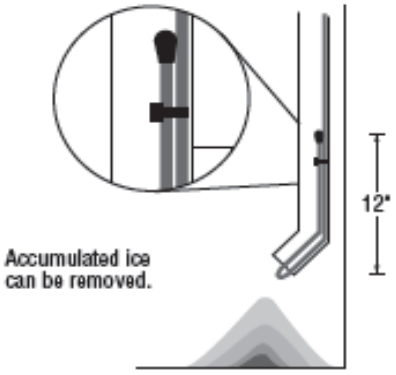

Figure 10 Heating cable in downspout

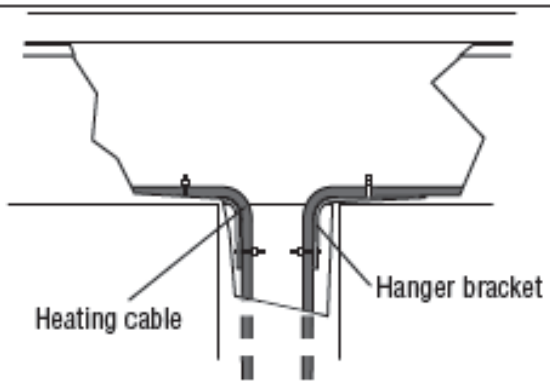

Figure 11 Hanger brackets

3. Mark the installation.

Two labels indicating the presence of electric de-icing and snow-melting equipment on the premises are included with the heating cable. One label must be posted at the electrical outlet cover. The other label must be posted at the fuse or circuit breaker panel. The labels must be clearly visible.

4. Check the installation.

- Prior to plugging in, check to be sure the heating cable is free of mechanical damage (cuts, clamps, etc.).
- Using a megohmmeter, test each circuit according to the instructions in the “Heating cable testing and maintenance” section on next page.

5. Starting the system.

- De-Icerman recommends that the system be tested per the “Cable testing and maintenance” section below.
- Plug the heating cable into a 120-V ground-fault protected outlet.
- Check the circuit breaker to verify power to the cable.

Heating cable testing and maintenance

Make sure that gutters and downspouts are free of leaves and other debris prior to the winter season.
Using a 500-Vdc megohmmeter (500 Vdc minimum), test the unit by checking the insulation resistance between the flat blade and the ground pin in the plug(or between the lead wires and ground wire). Minimum reading should be 1000 megohms regardless of DSR-RGS length.
Record the original values for each circuit. Take additional readings during regularly scheduled maintenance and compare to the original value. If the readings should fall below 1000 megohms, replace the DSR-RGS cable with a new unit. Do not attempt to repair the unit.

⚠ **WARNING: Fire and Shock Hazard.**
Damaged heating cable can cause electrical shock, arcing, and fire.
Do not attempt to repair or energize damaged heating cable. Remove it at once and replace with a new length.
***De-energize circuit before servicing**

Connecting the DSR-RGS cable to power

For 120 Volt cables, the heating cable can simply be plugged into a ground fault protected electrical receptacle.

For 240 Volt cables, the cable is designed to be directly connected into an appropriate electrical outlet box supplied by ground fault protected circuit.
Using the three wire connectors included in the kit, connect the black and white cold leads to both phase wires and the green cold lead to ground. Provide suitable UL Listed and CSA Certified junction box and outlet bushing and fitting.

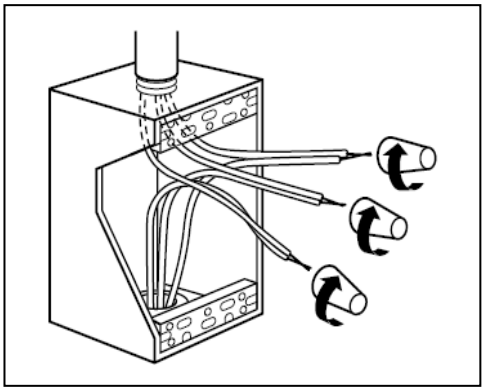

General specifications

Power output in ice	12 W/ft
Rated voltage	120/240 Vac
Cable bus wire gauge	17 AWG
Max. Continuous Exposure Temperature	85°C
Max. Continuous Operation Temperature (heating device energized)	65°C
Min. Installation Temperature	-20°C
Circuit breaker sizing minimum	15Amp
Minimum bend radius at -20°C	25mm
Electrical classification	Nonhazardous areas only
Exposure to chemicals	None