DE-ICERMAN

www.deicerman.com
sales@deicerman.com

DSR-PFP

Pre-assembled electric heating cables for pipe freeze protection

Installation Instructions

DESCRIPTION

DSR-PFP preassembled self-regulating heating cables are designed for residential and light commercial metal and plastic pipe freeze protection. DSR-PFP heating cables assembled with a 6 ft power lead.

Model information

DSR-PFP-X-Y, where
X: 3 (3W/FT), 5 (5W/FT), 8 (8W/FT), 10 (10W/FT)
Y: 1 (120V), 2 (240V)

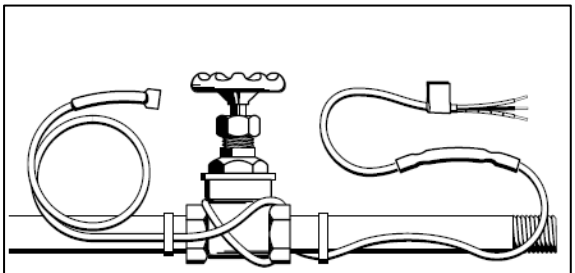

240V Pipe freeze protection

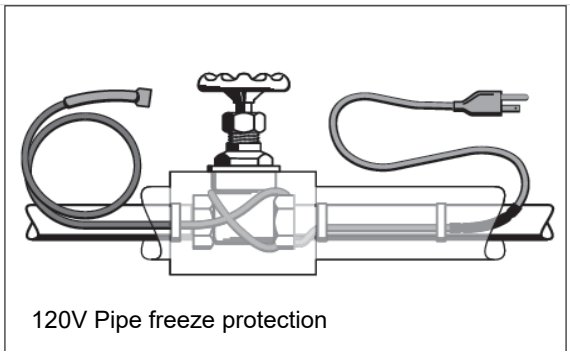

120V Pipe freeze protection

KIT CONTENTS

1 DSR-PFP preassembled electric heating cable
2 Pipe labels and Electric Traced Labels
3 Wire Connection nuts (for 240V)

ADDITIONAL ITEMS REQUIRED BUT NOT SUPPLIED

- Ground-fault protected outlet (GFCI, class A)
- Waterproof thermal insulation (e.g. preformed foam)
- Cable ties or glass-cloth tape

For DSR-PFP X2 (240V):

- UL Listed or CSA Certified junction box
- UL Listed or CSA Certified outlet bushing and fitting

APPROVALS

C SP US

⚠ WARNING:

Fire and Shock Hazard: This product is an electrical device that must be installed correctly to ensure proper operation and to prevent shock or fire. Read these important warnings and carefully follow all the installation instructions.

- To minimize the danger of fire from sustained electrical arcing if the heating cable is damaged or improperly installed, and to comply with the requirements of De-Icerman agency certifications, and national electrical codes, ground-fault equipment protection must be used on each heating cable branch circuit. Arcing may not be stopped by conventional circuit protection.
- Keep ends of heating devices and kit components dry before and during installation
- The conductive layer of this device shall not be utilized as a grounding conductor, but must be bonded to ground
- The presence of the heating devices shall be made evident by the posting of caution signs or markings at appropriate locations.
- For pipe freeze protection applications, use only fire-resistant insulation materials such as preformed foam or fiberglass.
- Do not damage the heating cable and power cord or plug. Remove any damaged cables from service immediately.
- Do not use any wire or metal clamps to attach the cable to the pipe. Use tape (1/2 inch wide to 1 inch wide) or plastic cable ties.
- Do not install the heating cable underneath any roof covering for roof and gutter de-icing.
- Leave these installation instructions with the user for future reference.
- When used with non-metallic conduit/pipe, the vicat softening temperature of the non-metallic conduit/pipe shall be greater than 85°C.
- **Installation in accordance with the Canadian Electrical Code Part I (CEC Part I) in Canada or the National Electrical Code (NEC) in the U.S.A.**

DSR-PFP heating cable installation

General requirements for pipe freeze protection:

- DSR-PFP heating cables may be used on metal and plastic water pipes but not on flexible vinyl tubing (such as garden hoses).
- DSR-PFP heating cables are not intended for use inside any pipes, for freeze protection of liquids other than water, or for use in classified hazardous locations.

General instructions:

· Install only in accessible locations; do not install behind walls or where the cable would be hidden.
· Do not run the heating cable through walls, ceilings, or floors.
· Connect only to ground-fault protected outlets that have been installed in accordance with all prevailing national and local codes and standards and are protected from rain and other water.

- Install with a minimum of 1/2" fire-resistant, waterproof thermal insulation.
- Never use on any pipes that may exceed 150°F(65°C).
- Do not use an extension cord.
- ***Installation Type A- Insulated surfaces (including pipe)***

Important:

For the DSR-PFP warranty to be valid, you must comply with all the requirements outlined in these guidelines

All thermal and design information provided here is based upon a "standard" installation with heating cable fastened to an insulated pipe. For any other application or method of installation, consult De-Icerman at +1 (647) 549-1347.

DSR-PFP heating cable selection for pipe freeze protection:

Use the tables to below to select the correct heating cable. Add 1 feet to your pipe length for each valve or spigot on your pipe system.
The charts assume the lowest outside temperature is 0° F (-18° C), with a minimum of 1/2" thick waterproof, fire-resistant thermal insulation (performed foam).For protection to -20°F(-29° C), use 1inch thick insulation.

Pipe Diameter	DSR-PFP (3W/ft)	DSR-PFP (5W/ft)	DSR-PFP (8W/ft)	DSR-PFP (10W/ft)
0.5inch(12.7mm)	2 pcs			
1.0 inch(25.4mm)		1 pcs		
1.5 inch(38.1mm)			1 pcs	
2.0 inch(50.8mm)				1 pcs
2.5 inch(63.5mm)				1 pcs

Add 1 foot to your pipe length for each valve or spigot on your pipe system. If cable selected is longer than the pipe, spiral it evenly along the entire pipe.

Figure 1 Straight-traced installation

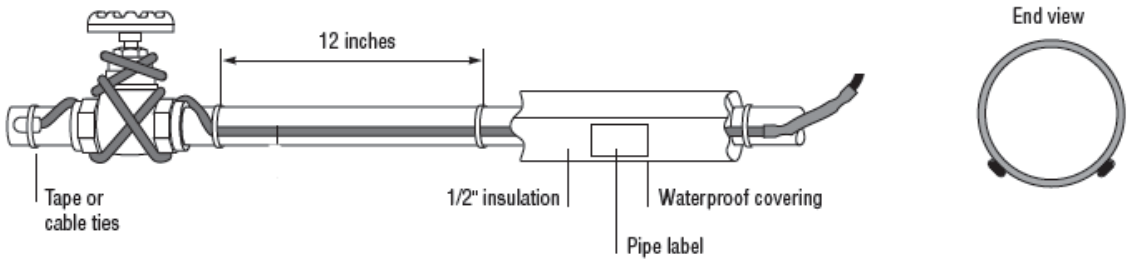

0

Figure 2 Spiral-traced installation

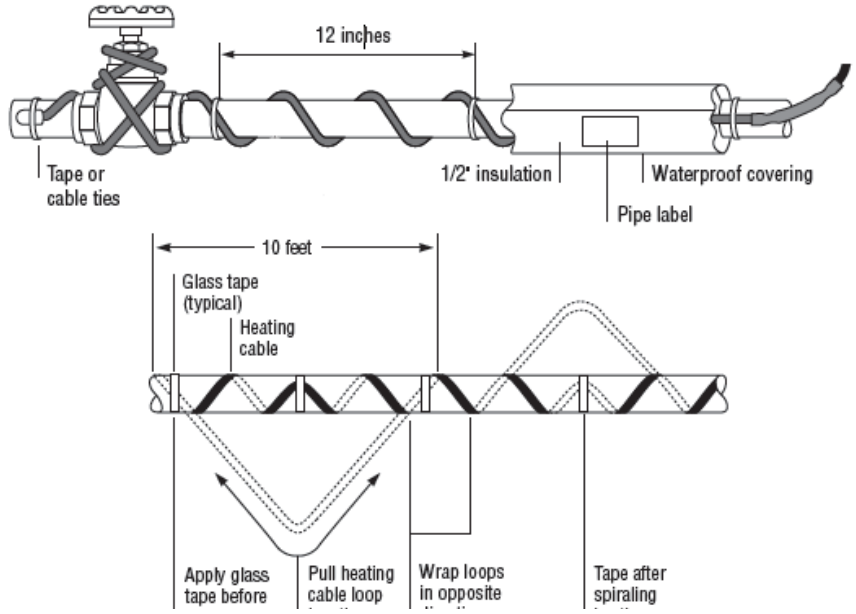

Heating cable installation

1. Prepare for installation.

- Store the heating cable in a clean, dry place.
- Complete piping pressure test.
- Prior to installing the cable, remove any sharp surfaces on the pipe that might damage the heating cable.
- Review the DSR-PFP heating cable design and compare to materials received to verify that you have the proper DSR-PFP heating cable.
- Walk the system and plan the routing of the DSR-PFP heating for valves, flanges, etc. as shown in Figures 1 and 2.
- When the design calls for spiraling, begin by suspending a loop every 10 feet as shown in Figure 2. To determine the loop length, divide the DSR-PFP length by your pipe length and multiply by 10. For example, if you are using a 50 ft DSR-PFP on a 40 foot pipe, leave a 12-foot loop of heating cable at every 10-foot section of pipe. Grasp the loop in its center and wrap it around the pipe. Even out the cable on the pipe.

2. Position and attach heating cable to pipe.

- Be sure all piping to be traced is dry.
- Install heating cable, using straight tracing Figure 1, or spiraling Figure 2.
- For straight tracing, install the heating cable on a lower half of the pipe; for example, in the 4 o'clock or 8 o'clock position.
- Be sure to install the additional heating cable required distance between spirals by sliding the wraps along the pipe. Use glass tape to secure the center of the loop to the pipe.
- Fasten DSR-PFP heating cable to the pipe at 1-foot intervals using fiberglass application tape or nylon cable ties. Do not use vinyl electrical tape, duct tape, metal bands, or wire.
- If excess cable remains at the end of the pipe, double it back along the pipe.

Figure 3

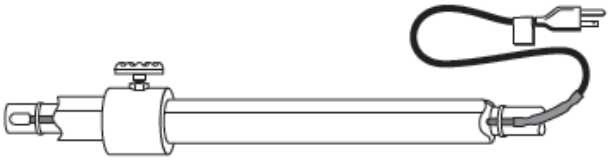

Figure 4



3. Check the installation.

- Prior to installing thermal insulation, make sure the heating cable is free of mechanical damage (from cuts, clamps, etc.) and thermal damage (from solder, overheating, etc.).

4. Install thermal insulation.

- A reliable DSR-PFP system depends on properly installed and dry, weatherproofed thermal insulation.
- Ensure that at least 1/2" of preformed foam or equivalent thermal insulation is used and that all piping, including valves, joints, and wall penetrations, has been fully insulated.
- For protection to -20°F (-29°C), use 1" thick insulation.
- Install the insulation on the piping as soon as possible to minimize the potential for mechanical damage after installation.
- Be sure the DSR-PFP label is visible on the outside of the thermal insulation.

5. Finishing the installation.

- Two labels indicating the presence of electric pipe heating cable are included with the heating cable. Attach the two "Electric Traced" labels on the outer surface of the pipe insulation at suitable intervals to indicate the presence of DSR-PFP electric heating cable.

Cable testing and maintenance

Using a 500-Vdc megohmmeter (500 Vdc minimum), check the insulation resistance between both of the rectangular (power) prongs on the plug and the round (ground) prong after installing the heating cable. Minimum reading should be 1000 megohms. Record the original values for each circuit, and compare subsequent readings taken during regular maintenance schedules to the original values. If the readings fall below 1000 megohms, replace the DSR-PFP cable with a new unit. Do not attempt to repair the unit.

⚠ **WARNING: Fire and Shock Hazard.**
Damaged heating cable can cause electrical shock, arcing, and fire.
Do not attempt to repair or energize damaged heating cable. Remove it at once and replace with a new length.
***De-energize circuit before servicing**

Connecting the DSR-PFP cable to power

For 120 Volt cables, the heating cable can simply be plugged Into a ground fault protected electrical receptacle.

For 240 Volt cables, the cable is designed to be directly connected into an appropriate electrical outlet box supplied by ground fault protected circuit.
Using the three wire connectors included in the kit, connect the black and white cold leads to both phase wires and the green cold lead to ground. Provide suitable UL Listed and CSA Certified junction box and outlet bushing and fitting.

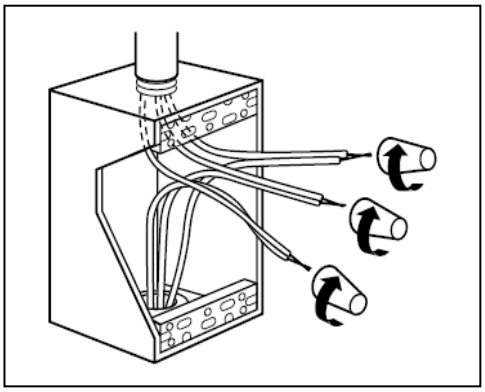

General specifications

Power output at 50°F /10°C (W/ft)	3, 5, 8, 10 W/ft
Rated voltage	120/240 Vac
Cable bus wire gauge	17 AWG
Max. Continuous Exposure Temperature	85°C
Max. Continuous Operation Temperature (heating device energized)	65°C
Min. Installation Temperature	-20°C
Circuit breaker sizing minimum	15Amp
Minimum bend radius at -18°C	25mm
Electrical classification	Nonhazardous areas only
Exposure to chemicals	None