DE-ICERMAN

Roof Clip Kit & Downspout Hanger

DRCK

User Manual

The DRCK kit includes clips for securing DSR-RGS heating cables to shingle and metal seam roofs and gutters. And a special design fixing bracket is also included to provide mechanical protection to the heating cables as it goes over sharp edges and to hold the heating cable in place at the top of downspouts.

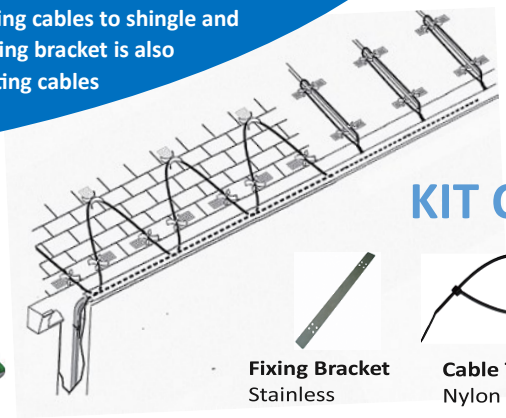

TOOLS REQUIRED



KIT CONTENT

Fixing Bracket
Stainless

Cable Ties
Nylon



Roof Clip

Additional Material Required

- Adhesives for Metal Roofs—Neutral-cure silicone adhesive (cure time for about 2days) and gray adhesive is recommended

ATTENTION:

- **The maximum permissible steady state Current is 30A.**
- **The rated voltage is 240V.**
- **The maximum continuous exposure temperature is 85°C.**
- **Temperature at the point of connection to branch circuit conductors may exceed 60 °C.**

Component approvals and performance are specifically tied to the use of De-Icerman specified parts. Do not substitute any parts.

Attaching Roof Clips

STEP 1

Roof without standing seam
(For roofs material that can be nailed or screwed into）

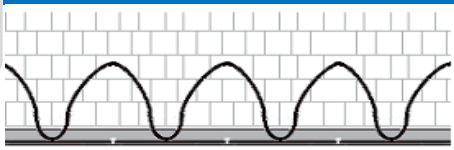

Please refer to “Design, Installation, and Maintenance Guide” of RGD to determine heating cable layout

STEP 1

Roof with standing seam
(For roofs where penetrating attachments are not workable)

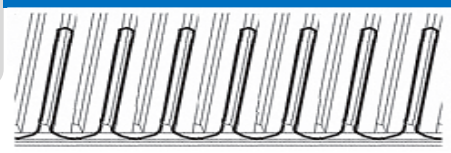

Please refer to “Design, Installation, and Maintenance Guide” of RGD to determine heating cable layout

STEP 2



Apply RTV sealant to the back side of clip.

STEP 2



Apply a liberal amount of RTV sealant to the back side of clip.

STEP 3



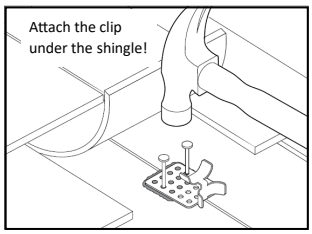

Attach the clip to roof and use nails or screws to fix it.
Fasten the clips to the roof before installing the heating cable in the bracket.

STEP 3



Pressure to the clip, allowing the RTV sealant to evenly spread and flow through the holes, ensuring a complete and effective seal
Fasten the clips to the roof with the adhesive and allow the adhesive to cure before installing the heating cable.

STEP 4

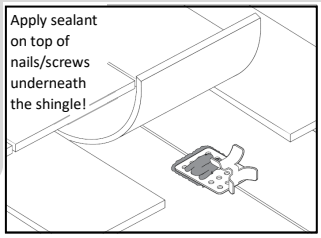



Using pliers to close the clamp to install the heating cable

Warning: Do not damage the outer jacket of the heating cable

STEP 4



Using pliers to close the clamp to install the heating cable

Warning: Do not damage the outer jacket of the heating cable

Installing Bracket in Gutter

STEP 1

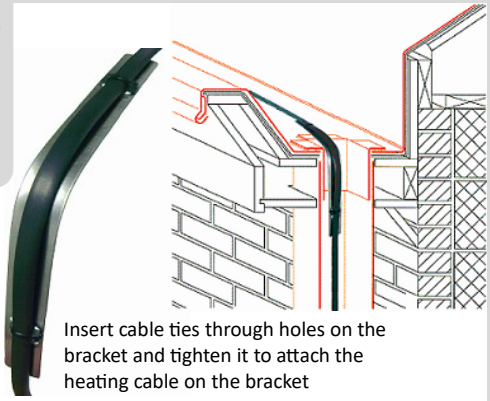

Insert cable ties through holes on the bracket and tighten it to attach the heating cable on the bracket

STEP 2



Place the bracket along the downspout or any sharp edge where the heating cable can be at risk of mechanical damage.

Attach the fixing bracket to the structure with a nail or other suitable method.

STEP 3



In wider gutters, it's possible for snow and ice to create a blockage over a single heating cable, preventing melt water from entering the gutter and downspouts. To ensure a clean path for the melted water to flow, it is recommended to install two parallel heating cables in the gutter. For detailed guidelines, please refer to the 'Design, Installation, and Maintenance Guide.

DE-ICERMAN

info@deicerman.com
www.deicerman.com
1-647-894-1347